FISH®
BRAND

The Symbol of Quality

Norma Products Malaysia Sdn. Bhd. (235586-U)

Contents

The Company 1

Product Specification and Data 2

PP Push Fit Compression Fittings ..... 3 - 10

IRRI Compression Ftttings 11-17

Mechanical Fittings 19-24

Home Fuse Polyethylene (PE) Socket Fusion Fittings 25-30

PE Spigot Fittings For Butt Fusion 31-35

Accessories 36-37

PP Threaded Fittings 38

Irrigation Fittings 39-44

Polyethylene Pipes 45-46

Reference Standard 47

Abbreviations 48

Terms And Conditions 49

The Company

Since establishment in 1992, Norma Products Malaysia Sdn. Bhd. has been committed to meet the higher expectation of quality pipe fittings and increasing industry demand to support the water delivery and distribution networks in the local and global markets.

Located in Ipoh approximately 200km north from Kuala Lumpur, Malaysia, Norma Products Malaysia Sdn. Bhd. emerges as a leading manufacturer of thermoplastic pipe fittings, irrigation fittings, water works products and sanitary-wares in the South East Asia region. Marketing under it well recognised FISH® the company is glad to receive continuous strong supports from partners, distributors and customers who widely adopt our reliable products and solutions in more than 40 countries globally.

Driven by its core values of "Quality, Commitment, Expertise" the company is ISO 9001: 2008 Certified by Integrated Quality Certification PVT. LTD. and has multiple product certification and endorsement from domestic and international accreditation body such as Standard and Industrial Research Institute of Malaysia (SIRIM), Institute Kualiti & Persijilan IKRAM (IQCI) and the National Water Service Commission of Malaysia (SPAN); and Watermarks Approval, Australia.

The company is proud to receive the industry awards of Malaysia Good Design (2008) and Golden Bull Award (2009) for its outstanding contribution in product innovation and entrepreneurial business management.

On 1st December 2012, Norma Products Malaysia Sdn. Bhd. becoming a member of NORMA Group who is a global market and technology leader in engineered joining technologies. This acquisition paves a strategic collaboration and partnership within the company to drive the business forward intensifying efforts to continuously improve and offer value-added products and services to our valued customers in the water industry.

The management and our highly committed 200 employees have the ultimate goal to strengthen the capability of the company and drive the business forward to meet the ever changing future challenges in offering the reliable solutions in pipe fittings and connections to our valued customer.

Product Specification And Data

PP COMPRESSION FITTINGS

Reference Standard	BS 5114, AS 4020
Pipe Suitability	Polyethylene Pipe PE 80 & PE100 ISO 4427 , MS 1058
Working Pressure	PN16 (20mm-63mm) PN12.5 (75mm-110mm)
Material	
Body	Polypropylene
Nut	Polypropylene
Clinching Ring	Acetal
'O' Ring	Nitrile Butadiene Rubber
Reinforced Cap	Stainless Steel , for female offtake from 50mm O.D. onward, for smaller sizes - available upon request

IRRI COMPRESSION FITTINGS

Reference Standard	BS 5114, AS 4020
Pipe Suitability	Polyethylene Pipe, PE 80 & PE 100 ISO 4427 , MS 1058
Working Pressure	PN10
Material	
Body	Polypropylene
Nut	Polypropylene
Chinching Ring	Acetal
'O' Ring	Nitrile Butadiene Rubber
Reinforced Cap	Stainless Steel, for female offtake from 50mm O.D. onward, for smaller sizes - available upon request

PP MECHANICAL CLAMP SADDLE

Reference Standard	JKR 20709-0346-95
Pipe Suitability	Polyethylene Pipe, PE 80 & PE 100 ISO 4427 , MS 1058
Working Pressure	PN12.5
Material	
Body	Reinforced Polypropylene
Reinforced Ring	Stainless Steel
Gasket / 'O' Ring	Nitrile Butadiene Rubber
Bolt & Nut	Mild Steel, Zinc Plated (Stainless Steel available upon request)

PP TAPPING FERRULE

Reference Standard	JKR 20200-0055-99
Pipe Suitability	Polyethylene Pipe, PE 80 - SDR 11 ISO 4427, MS 1058 Unplasticised Polyvinyl Chloride pipe BS 3505 or MS 628
Working Pressure	PN12.5
Material	
Body	Polypropylene
Cap	Polypropylene
'O' Ring	Nitrile Butadiene Rubber
Cutter	Carbon Steel , Zinc Plated

PE SOCKET FUSION FITTINGS

Reference Standard	DIN 16963
Pipe Suitability	Polyethylene Pipe , PE 80 & PE100 ISO 4427, MS 1058
Working Pressure	PN12.5
Material	
Body	Polyethylene - PE 80
Threaded Part	Brass

PE FABRICATED ELBOW, TEE & CROSS

Reference Standard	DIN 16963
Pipe Suitability	Polyethylene Pipe, PE 80 / PE100 ISO 4427, MS 1058

PE STUB END, REDUCER, SPIGOT END CAP

Reference Standard	DIN 16963
Pipe Suitability	Polyethylene Pipe, PE 80 & PE 100 SDR 21, 17, 13.6 & 11 ISO 4427, MS 1058
Working Pressure	PN 6, 8, 10, 12.5 & 16
Material	Polyethylene PE 80 / PE 100

PP THREADED FITTINGS

Reference Standard	BS 21, ISO 7
Material	Polypropylene

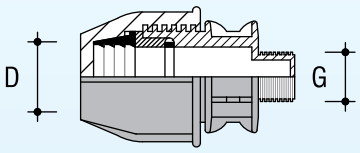

Male Threaded Adaptor (MTA)

Reg I/D No: MY 10-00665-1112

Product Code	D x G / mm	Approx. wt. gm / pc	Standard Packing bag	box
90-MA-513	20 x 1/2"	38	500	400
90-MA-514	20 x 3/4"	39	500	400
90-MA-515	25 x 1/2"	59	300	250
90-MA-516	25 x 3/4"	59	300	250
90-MA-517	25 x 1"	63	300	250
90-MA-572	32 x 1/2"	86	200	160
90-MA-518	32 x 3/4"	87	200	160
90-MA-519	32 x 1"	90	200	160
90-MA-585	32 x 1 1/4"	94	200	160
90-MA-559	40 x 3/4"	150	120	100
90-MA-520	40 x 1"	155	120	100
90-MA-521	40 x 1 1/4"	156	120	100
90-MA-522	40 x 1 1/2"	163	120	100
90-MA-528	50 x 1 1/4"	237	60	50
90-MA-526	50 x 1 1/2"	240	60	50
90-MA-527	50 x 2"	244	60	50
90-MA-530	63 x 1 1/2"	346	40	32
90-MA-531	63 x 2"	347	40	32
90-MA-532	75 x 2"	500	30	25
90-MA-533	75 x 2 1/2"	513	30	25
90-MA-537	90 x 3"	799	20	16
90-MA-569	110 x 4"	1292	12	8

Female Threaded Adaptor (FTA)

Reg I/D No: MY 10-00666-1212

Product Code	D x G / mm	Approx. wt. gm / pc	Standard Packing bag	box
90-FA-513	20 x 1/2"	38	500	400
90-FA-514	20 x 3/4"	39	500	400
90-FA-515	25 x 1/2"	59	300	250
90-FA-516	25 x 3/4"	59	300	250
90-FA-517	25 x 1"	63	300	250
90-FA-518	32 x 3/4"	87	200	160
90-FA-519	32 x 1"	90	200	160
90-FA-520	40 x 1"	155	120	100
90-FA-521	40 x 1 1/4"	156	120	100
90-FA-522	40 x 1 1/2"	163	100	80
90-FA-526	50 x 1 1/2"	240	60	50
90-FA-531	63 x 2"	347	40	32
90-FA-532	75 x 2"	500	30	25
90-FA-533	75 x 2 1/2"	513	30	25
90-FA-537	90 x 3"	799	20	16
90-FA-569	110 x 4"	1292	12	8

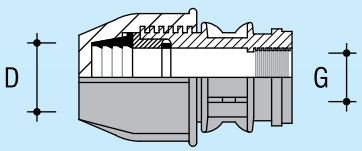

Note: Reinforce cap provided upon request

PP Push Fit Compression Fittings

Male Tee (MT)

Reg I/D No: MY 10-00657-0312

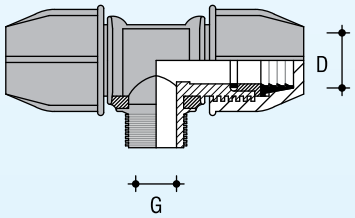

Product Code	D x G / mm	Approx. wt. gm / pc	Standard Packing	
			bag	box
90-MT-513	20 x 1/2"	79	200	160
90-MT-514	20 x 3/4"	80	200	160
90-MT-515	25 x 1/2"	117	150	100
90-MT-516	25 x 3/4"	118	150	100
90-MT-517	25 x 1"	124	150	100
90-MT-518	32 x 3/4"	184	80	64
90-MT-519	32 x 1"	185	80	64
90-MT-520	40 x 1"	335	40	32
90-MT-521	40 x 1 1/4"	335	40	32
90-MT-528	50 x 1 1/4"	488	30	24
90-MT-526	50 x 1 1/2"	494	30	24
90-MT-531	63 x 2"	761	20	15
90-MT-532	75 x 2"	1073	15	10
90-MT-533	75 x 2 1/2"	1168	15	10
90-MT-537	90 x 3"	1824	8	6
90-MT-569	110 x 4"	2808	5	3

Female Tee (FT)

Reg I/D No: MY 10-00658-0412

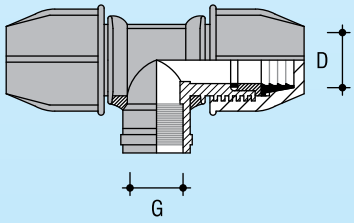

Product Code	D x G / mm	Approx. wt. gm / pc	Standard Packing	
			bag	box
90-FT-513	20 x 1/2"	82	200	160
90-FT-514	20 x 3/4"	84	200	160
90-FT-515	25 x 1/2"	123	150	100
90-FT-516	25 x 3/4"	126	150	100
90-FT-517	25 x 1"	136	150	100
90-FT-518	32 x 3/4"	187	80	64
90-FT-519	32 x 1"	194	80	64
90-FT-520	40 x 1"	332	40	32
90-FT-521	40 x 1 1/4"	330	40	32
90-FT-526	50 x 1 1/2"	507	30	24
90-FT-531	63 x 2"	806	20	15
90-FT-533	75 x 2 1/2"	1115	15	10
90-FT-537	90 x 3"	1735	8	6
90-FT-569	110 x 4"	2986	5	3

Note: Reinforce cap provided upon request

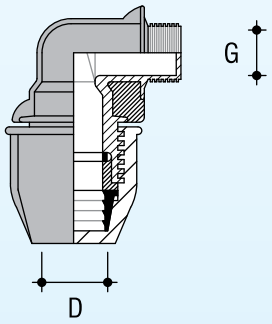

Male Bend 90° (MB)

Reg I/D No: MY 10-00660-0612

Product Code	D x G / mm	Approx. wt. gm / pc	Standard Packing	
			bag	box
90-MB-513	20 x 1/2"	42	400	300
90-MB-514	20 x 3/4"	45	400	300
90-MB-515	25 x 1/2"	65	250	200
90-MB-516	25 x 3/4"	68	250	200
90-MB-517	25 x 1"	76	250	200
90-MB-518	32 x 3/4"	97	150	120
90-MB-519	32 x 1"	107	150	120
90-MB-520	40 x 1"	164	80	64
90-MB-521	40 x 1 1/4"	186	80	64
90-MB-522	40 x 1 1/2"	191	80	64
90-MB-528	50 x 1 1/4"	285	50	40
90-MB-526	50 x 1 1/2"	285	50	40
90-MB-527	50 x 2"	308	50	40
90-MB-531	63 x 2"	410	30	24
90-MB-532	75 x 2"	619	24	16
90-MB-533	75 x 2 1/2"	616	24	16
90-MB-537	90 x 3"	997	12	10
90-MB-569	110 x 4"	1696	8	6

Female Bend 90° (FB)

Reg I/D No: MY 10-00661-0712

Product Code	D x G / mm	Approx. wt. gm / pc	Standard Packing	
			bag	box
90-FB-513	20 x 1/2"	48	400	300
90-FB-514	20 x 3/4"	52	400	300
90-FB-515	25 x 1/2"	67	250	200
90-FB-516	25 x 3/4"	71	250	200
90-FB-517	25 x 1"	78	250	200
90-FB-572	32 x 1/2"	108	150	120
90-FB-518	32 x 3/4"	110	150	120
90-FB-519	32 x 1"	113	150	120
90-FB-520	40 x 1"	178	80	64
90-FB-521	40 x 1 1/4"	187	80	64
90-FB-526	50 x 1 1/2"	284	50	40
90-FB-531	63 x 2"	443	30	24
90-FB-533	75 x 2 1/2"	641	24	16
90-FB-537	90 x 3"	1060	12	10
90-FB-569	110 x 4"	1799	8	6

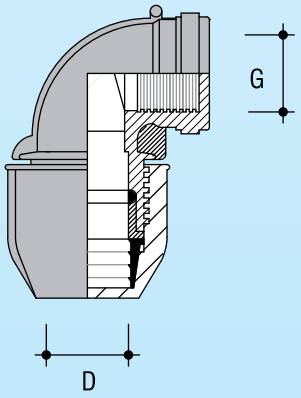

Note: Reinforce cap provided upon request

PP Push Fit Compression Fittings

Straight Coupler (SC)

Reg I/D No: MY 10-00662-0812

Product Code	D / mm	Approx. wt. gm / pc	Standard Packing	
			bag	box
90-SC-311	20	65	300	250
90-SC-312	25	102	180	150
90-SC-313	32	155	120	100
90-SC-314	40	274	60	50
90-SC-315	50	417	40	32
90-SC-316	63	610	30	20
90-SC-317	75	886	20	14
90-SC-318	90	1374	12	12
90-SC-319	110	2206	8	5

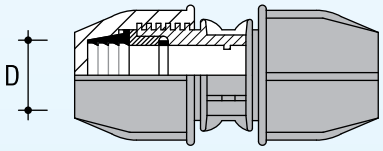

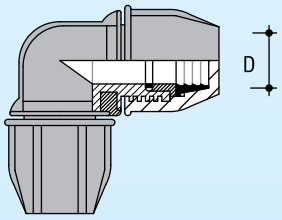

Equal Bend 90° (EB)

Reg I/D No: MY 10-00659-0512

Product Code	D / mm	Approx. wt. gm / pc	Standard Packing	
			bag	box
90-EB-311	20	71	300	250
90-EB-312	25	112	180	150
90-EB-313	32	173	100	80
90-EB-314	40	297	60	50
90-EB-315	50	459	40	32
90-EB-316	63	715	20	15
90-EB-317	75	1008	18	12
90-EB-318	90	1590	10	8
90-EB-319	110	2523	6	4

Equal Tee (ET)

Reg I/D No: MY 10-00655-0112

Product Code	D / mm	Approx. wt. gm / pc	Standard Packing	
			bag	box
90-ET-311	20	106	180	150
90-ET-312	25	164	120	100
90-ET-313	32	253	60	50
90-ET-314	40	440	40	32
90-ET-315	50	667	25	20
90-ET-316	63	1047	15	12
90-ET-317	75	1473	10	8
90-ET-318	90	2295	6	5
90-ET-319	110	3592	4	3

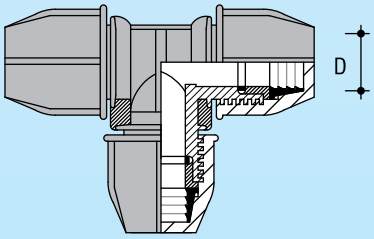

End Cap (EC)

Reg I/D No: MY 10-00664-1012

Product Code	D / mm	Approx. wt. gm / pc	Standard Packing	
			bag	box
90-EC-311	20	36	500	400
90-EC-312	25	58	300	250
90-EC-313	32	85	200	160
90-EC-314	40	148	120	100
90-EC-315	50	232	60	50
90-EC-316	63	336	40	32
90-EC-317	75	493	30	25
90-EC-318	90	774	20	16
90-EC-319	110	1223	12	8

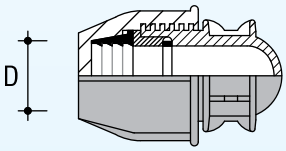

Reducing Coupler (RC)

Reg I/D No: MY 10-00663-0912

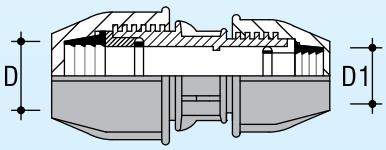

Product Code	D x D_1 / mm	Approx. wt. gm / pc	Standard Packing	
			bag	box
90-RC-611	25 x 20	84	200	200
90-RC-612	32 x 20	112	150	120
90-RC-613	32 x 25	130	150	120
90-RC-695	40 x 20	179	60	60
90-RC-694	40 x 25	193	60	60
90-RC-614	40 x 32	220	60	60
90-RC-696	50 x 20	261	50	50
90-RC-615	50 x 25	275	50	50
90-RC-616	50 x 32	296	50	50
90-RC-617	50 x 40	349	40	32
90-RC-677	63 x 25	384	30	30
90-RC-618	63 x 32	407	30	30
90-RC-619	63 x 40	456	30	24
90-RC-620	63 x 50	518	30	24
90-RC-0604	75 x 40	608	24	16
90-RC-679	75 x 50	675	24	16
90-RC-621	75 x 63	753	24	16
90-RC-622	90 x 63	1036	15	12
90-RC-623	90 x 75	1150	15	12
90-RC-625	110 x 90	1826	9	6

Reducing Tee (RT)

Reg I/D No: MY 10-00656-0212

Product Code	D x D_1 / mm	Approx. wt. gm / pc	Standard Packing	
			bag	box
90-RT-611	25 x 20	145	120	100
90-RT-612	32 x 20	207	80	64
90-RT-613	32 x 25	222	80	64
90-RT-694	40 x 25	374	40	32
90-RT-614	40 x 32	395	40	32
90-RT-615	50 x 25	528	30	24
90-RT-616	50 x 32	550	30	24
90-RT-617	50 x 40	592	25	20
90-RT-618	63 x 32	829	20	15
90-RT-619	63 x 40	869	20	15
90-RT-620	63 x 50	921	15	12
90-RT-0604	75 x 40	1186	12	8
90-RT-679	75 x 50	1232	12	8
90-RT-621	75 x 63	1375	12	8
90-RT-622	90 x 63	2025	8	6
90-RT-623	90 x 75	2148	8	6
90-RT-625	110 x 90	3264	5	3

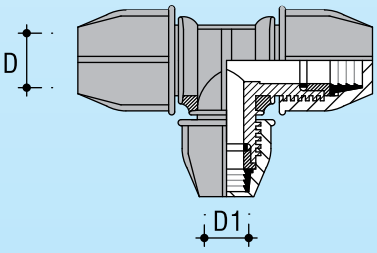

PP Push Fit Compression Fittings with Brass Insert

Female Bend 90°(FB)

Product Code	D x G / mm	Approx. wt. gm / pcs
90-FB-514B	20 x 3/4"	95
90-FB-516B	25 x 3/4"	113
90-FB-519B	32 x 1"	178

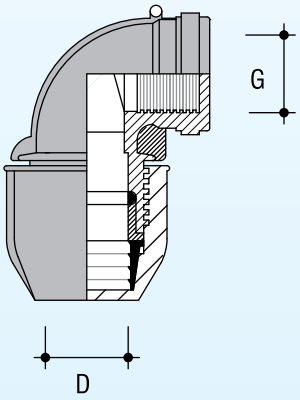

Female Threaded Adaptor (FTA)

Product Code	D x G / mm	Approx. wt. gm / pcs
90-FA-513B	20 x 1/2"	80
90-FA-516B	25 x 3/4"	104
90-FA-517B	25 x 1"	140
90-FA-519B	32 x 1"	167

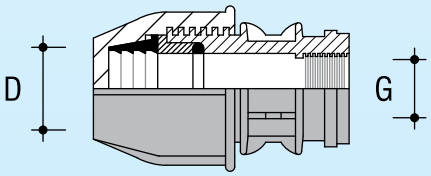

Male Threaded Adaptor (MTA)

Product Code	D x G / mm	Approx. wt. gm / pcs
90-MA-513B	20 x 1/2"	80
90-MA-516B	25 x 3/4"	104
90-MA-517B	25 x 1"	140
90-MA-519B	32 x 1"	167

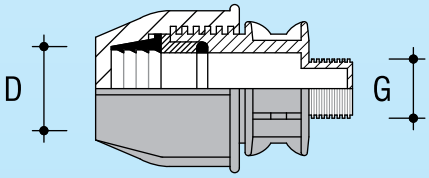

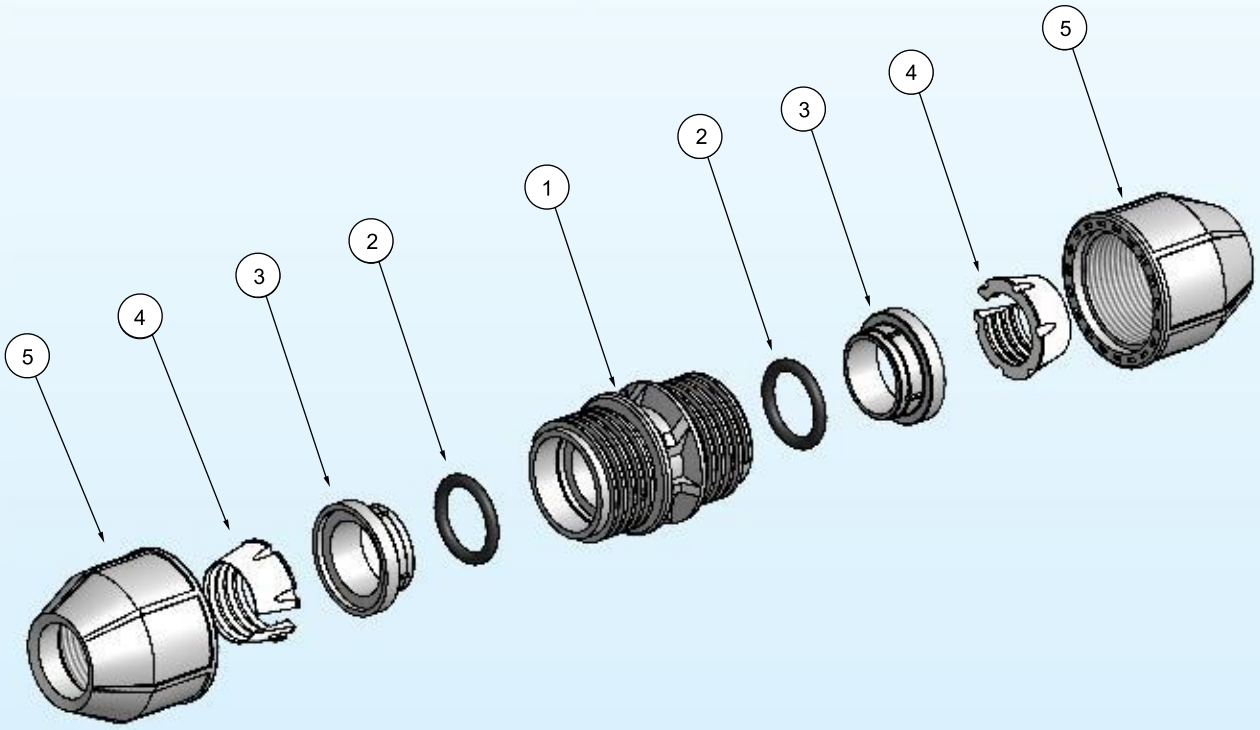

Components of a PP Compression Fittings

Item	Name Of Part	Material
1	Body	Polypropylene
2	Rubber 'O' Ring	Nitrile Butadiene Rubber
3	Holder	Polypropylene
4	Clinching Ring	Acetal
5	Locking Nut	Polypropylene

PP Push Fit Compression Fittings

Assembly Procedures

1. Cut the pipe square with a proper pipe cutter. Clean the burr at the pipe end.

2. Mark the insertion depth on the pipe according to the 'Insertion Table'

3. Loosen the locking nut by two or three threads showing before insert the pipe.

4. Insert the pipe into the fitting according to the 'Insertion Table'. Make sure the pipe is right at the correct depth.

5. Join another outlet.

6. Tighten the locking nut after the pipe is fully inserted. To ensure the fitting is fastened, make sure the locking nut exceed the last thread of the body.

Must clear the burr.

Avoid from oval shape pipe.

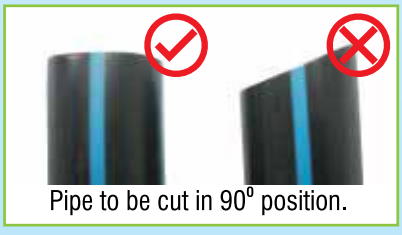

Pipe to be cut in 90^{0} position.

Insertion Table

Pipe O.D (mm)	Insertion Depth (mm)
20	50
25	65
32	70
40	80
50	90
63	100
75	106
90	130
110	155

Note: Should not be use barrier pipe systems

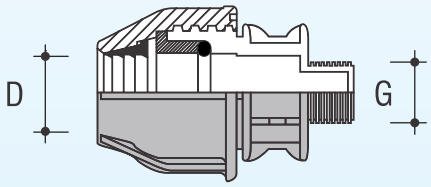

Male Threaded Adaptor (MTA)

Product Code	D x G / mm	Approx. wt. gm / pc	Standard Packing	
			bag	box
93-MA-513	20 x 1/2"	27	600	500
93-MA-514	20 x 3/4"	28	600	500
93-MA-515	25 x 1/2"	43	350	300
93-MA-516	25 x 3/4"	43	350	300
93-MA-517	25 x 1"	47	350	300
93-MA-518	32 x 3/4"	65	240	200
93-MA-519	32 x 1"	69	240	200
93-MA-520	40 x 1"	110	120	100
93-MA-521	40 x 1 1/4"	111	120	100
93-MA-522	40 x 1 1/2"	112	120	100
93-MA-528	50 x 1 1/4"	178	70	60
93-MA-526	50 x 1 1/2"	179	70	60
93-MA-527	50 x 2"	184	70	60
93-MA-530	63 x 1 1/2"	286	56	40
93-MA-531	63 x 2"	389	56	40
93-MA-532	75 x 2"	480	30	25
93-MA-533	75 x 2 1/2"	493	30	25
93-MA-537	90 x 3"	779	20	16

Female Threaded Adaptor (FTA)

Product Code	D x G / mm	Approx. wt. gm / pc	Standard Packing	
			bag	box
93-FA-513	20 x 1/2"	28	600	500
93-FA-514	20 x 3/4"	32	600	500
93-FA-515	25 x 1/2"	44	350	300
93-FA-516	25 x 3/4"	45	350	300
93-FA-517	25 x 1"	51	350	300
93-FA-518	32 x 3/4"	69	240	200
93-FA-519	32 x 1"	72	240	200
93-FA-520	40 x 1"	116	120	100
93-FA-521	40 x 1 1/4"	121	120	100
93-FA-522	40 x 1 1/2"	133	120	100
93-FA-526	50 x 1 1/2"	196	70	60
93-FA-531	63 x 2"	305	56	40
93-FA-532	75 x 2"	480	30	25
93-FA-533	75 x 2 1/2"	493	30	25
93-FA-537	90 x 3"	779	20	16

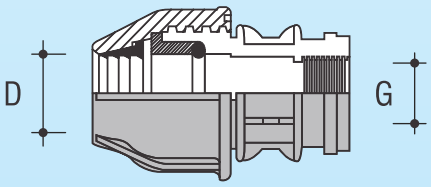

Note: Reinforce cap provided upon request

IRRI Compression Fittings

Male Tee (MT)

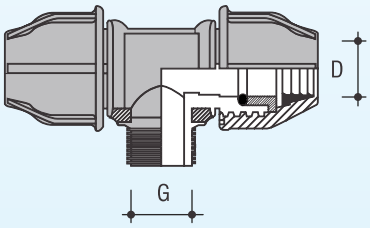

Product Code	D x G / mm	Approx. wt. gm / pc	Standard Packing	
			bag	box
93-MT-513	20 x 1/2"	52	280	240
93-MT-514	20 x 3/4"	54	280	240
93-MT-515	25 x 1/2"	84	150	125
93-MT-516	25 x 3/4"	85	150	125
93-MT-517	25 x 1"	91	150	125
93-MT-518	32 x 3/4"	131	105	90
93-MT-519	32 x 1"	136	105	90
93-MT-520	40 x 1"	229	56	48
93-MT-521	40 x 1 1/4"	242	56	48
93-MT-528	50 x 1 1/4"	359	36	30
93-MT-526	50 x 1 1/2"	367	36	30
93-MT-531	63 x 2"	611	25	20
93-MT-532	75 x 2"	1033	15	10
93-MT-533	75 x 2 1/2"	1128	15	10
93-MT-537	90 x 3"	1784	8	6

Female Tee (FT)

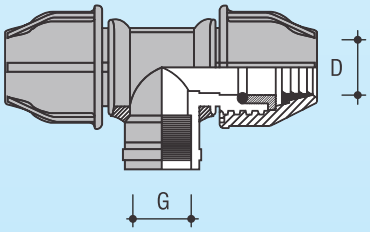

Product Code	D x G / mm	Approx. wt. gm / pc	Standard Packing	
			bag	box
93-FT-513	20 x 1/2"	55	280	240
93-FT-514	20 x 3/4"	59	280	240
93-FT-515	25 x 1/2"	85	150	125
93-FT-516	25 x 3/4"	89	150	125
93-FT-517	25 x 1"	95	150	125
93-FT-518	32 x 3/4"	133	105	90
93-FT-519	32 x 1"	138	105	90
93-FT-520	40 x 1"	239	56	48
93-FT-521	40 x 1 1/4"	235	56	48
93-FT-526	50 x 1 1/2"	381	36	30
93-FT-531	63 x 2"	617	25	20
93-FT-533	75 x 2 1/2"	1075	15	10
93-FT-537	90 x 3"	1695	8	6

Note: Reinforce cap provided upon request

Male Bend (MB)

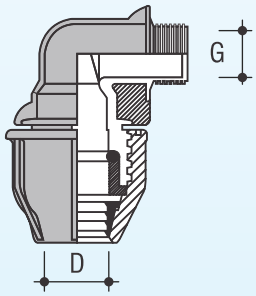

Product Code	D x G / mm	Approx. wt. gm / pc	Standard Packing	
			bag	box
93-MB-513	20 x 1/2"	29	500	400
93-MB-514	20 x 3/4"	31	500	400
93-MB-515	25 x 1/2"	44	300	250
93-MB-516	25 x 3/4"	47	300	250
93-MB-517	25 x 1"	53	300	250
93-MB-518	32 x 3/4"	70	180	150
93-MB-519	32 x 1"	77	180	150
93-MB-520	40 x 1"	125	112	80
93-MB-521	40 x 1 1/4"	133	112	80
93-MB-522	40 x 1 1/2"	136	112	80
93-MB-528	50 x 1 1/4"	203	60	50
93-MB-526	50 x 1 1/2"	207	60	50
93-MB-527	50 x 2"	227	60	50
93-MB-531	63 x 2"	344	42	36
93-MB-532	75 x 2"	595	24	16
93-MB-533	75 x 2 1/2"	599	24	16
93-MB-537	90 x 3"	977	12	10

Female Bend (FB)

Product Code	D x G / mm	Approx. wt. gm / pc	Standard Packing	
			bag	box
93-FB-513	20 x 1/2"	32	500	400
93-FB-514	20 x 3/4"	37	500	400
93-FB-515	25 x 1/2"	48	300	250
93-FB-516	25 x 3/4"	53	300	250
93-FB-517	25 x 1"	59	300	250
93-FB-518	32 x 3/4"	74	180	150
93-FB-519	32 x 1"	82	180	150
93-FB-520	40 x 1"	129	112	80
93-FB-521	40 x 1 1/4"	139	112	80
93-FB-526	50 x 1 1/2"	220	60	50
93-FB-531	63 x 2"	354	42	36
93-FB-533	75 x 2 1/2"	621	24	16
93-FB-537	90 x 3"	1040	12	10

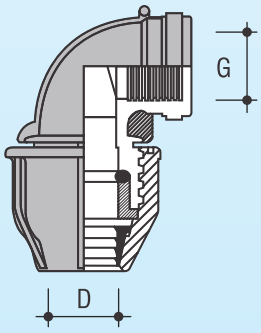

Note: Reinforce cap provided upon request

Straight Coupler (SC)

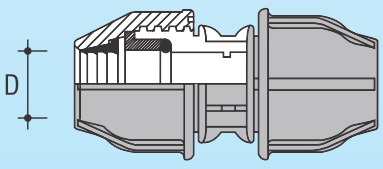

Product Code	D / mm	Approx. wt. gm / pc	Standard Packing	
			bag	box
93-SC-311	20	47	400	300
93-SC-312	25	75	240	210
93-SC-313	32	115	140	120
93-SC-314	40	190	80	60
93-SC-315	50	310	48	40
93-SC-316	63	500	35	30
93-SC-317	75	846	20	14
93-SC-318	90	1334	12	12

IRRI Compression Fittings

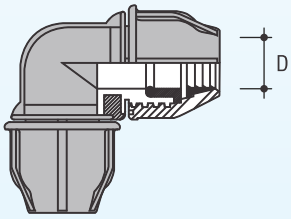

Equal Bend (EB)

Product Code	D / mm	Approx. wt. gm / pc	Standard Packing	
			bag	box
93-EB-311	20	48	350	300
93-EB-312	25	78	210	180
93-EB-313	32	126	120	100
93-EB-314	40	208	60	50
93-EB-315	50	241	40	32
93-EB-316	63	564	25	20
93-EB-317	75	968	18	12
93-EB-318	90	1550	10	8

Equal Tee (ET)

Product Code	D / mm	Approx. wt. gm / pc	Standard Packing	
			bag	box
93-ET-311	20	72	240	180
93-ET-312	25	116	140	100
93-ET-313	32	188	80	70
93-ET-314	40	305	40	32
93-ET-315	50	500	25	20
93-ET-316	63	845	18	15
93-ET-317	75	1413	10	8
93-ET-318	90	2235	6	5

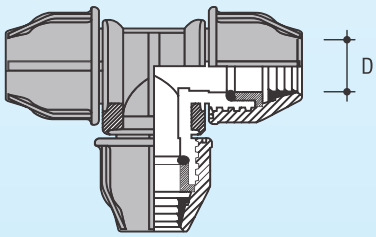

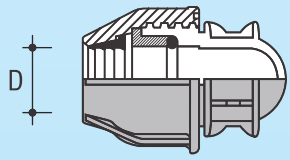

End Cap (EC)

Product Code	D / mm	Approx. wt. gm / pc	Standard Packing	
			bag	box
93-EC-311	20	26	700	600
93-EC-312	25	42	450	350
93-EC-313	32	64	280	240
93-EC-314	40	104	160	120
93-EC-315	50	173	80	60
93-EC-316	63	281	56	48
93-EC-317	75	473	30	25
93-EC-318	90	754	20	16

Reducing Coupler (RC)

Product Code	D x D1 / mm	Approx. wt. gm / pc	Standard Packing	
			bag	box
93-RC-611	25 x 20	61	280	240
93-RC-612	32 x 20	83	180	180
93-RC-613	32 x 25	96	180	150
93-RC-695	40 x 20	125	120	90
93-RC-694	40 x 25	138	120	90
93-RC-614	40 x 32	157	120	90
93-RC-696	50 x 20	191	80	60
93-RC-615	50 x 25	204	80	60
93-RC-616	50 x 32	224	70	50
93-RC-617	50 x 40	257	56	48
93-RC-677	63 x 25	313	48	36
93-RC-618	63 x 32	331	48	36
93-RC-619	63 x 40	364	42	36
93-RC-620	63 x 50	414	42	36
93-RC-0604	75 x 40	588	24	16
93-RC-679	75 x 50	635	24	16
93-RC-621	75 x 63	713	24	16
93-RC-622	90 x 63	996	15	12
93-RC-623	90 x 75	1110	15	12

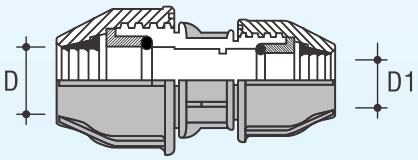

Reducing Tee (RT)

Product Code	D x D1 / mm	Approx. wt. gm / pc	Standard Packing	
			bag	box
93-RT-611	25 x 20	104	140	120
93-RT-612	32 x 20	150	90	75
93-RT-613	32 x 25	164	90	75
93-RT-694	40 x 25	253	56	56
93-RT-614	40 x 32	267	56	56
93-RT-615	50 x 25	386	36	24
93-RT-616	50 x 32	399	30	24
93-RT-617	50 x 40	435	30	25
93-RT-618	63 x 32	666	25	15
93-RT-619	63 x 40	685	25	15
93-RT-620	63 x 50	737	20	15
93-RT-0604	75 x 40	1126	12	8
93-RT-679	75 x 50	1172	12	8
93-RT-621	75 x 63	1315	12	8
93-RT-622	90 x 63	1965	8	6
93-RT-623	90 x 75	2088	8	6

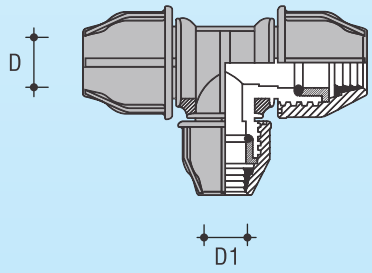

IRRI Compression Fittings

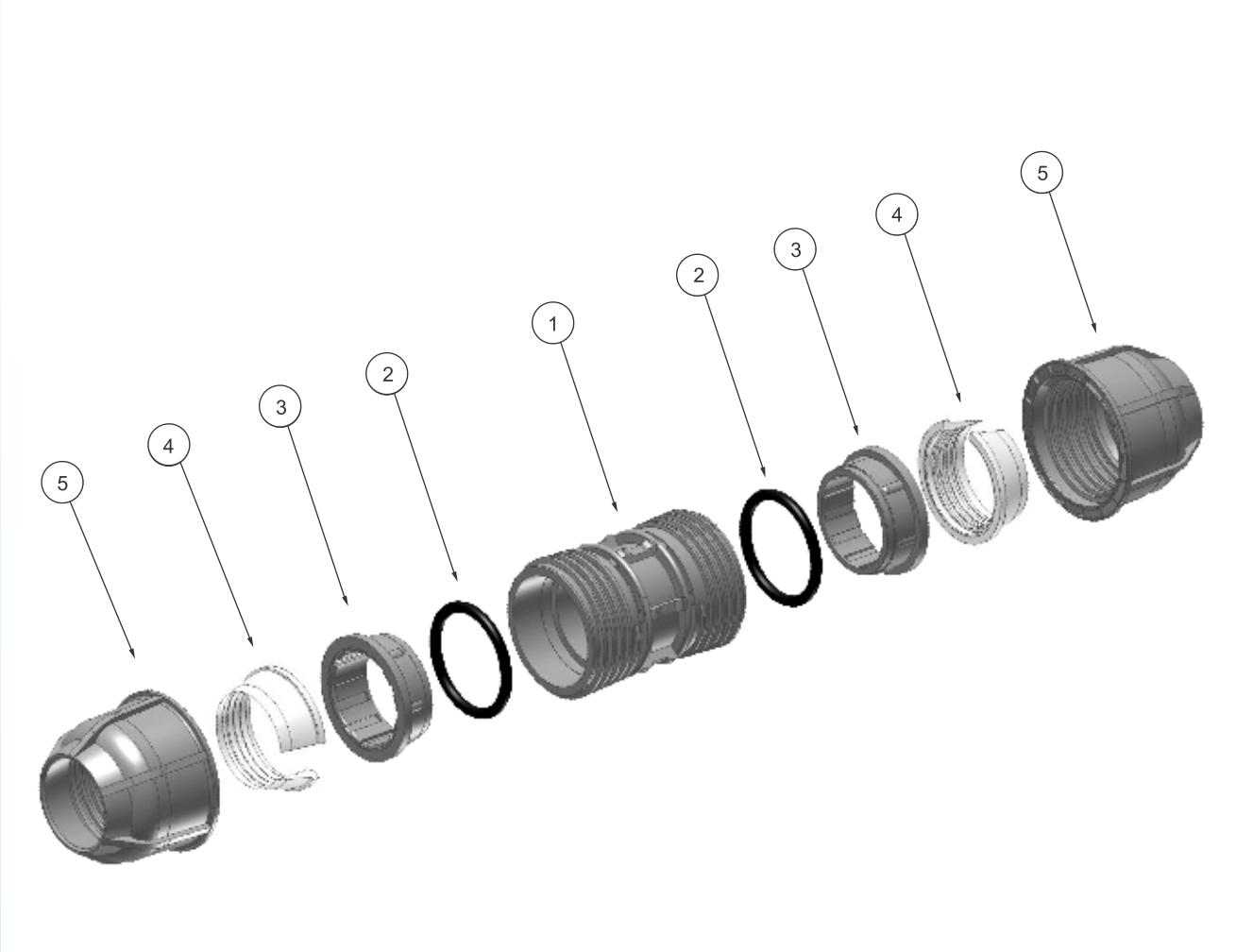

Components of a IRRI Compression Fittings

Item	Name Of Part	Material
1	Body	Polypropylene
2	Rubber 'O' Ring	Nitrile Butadiene Rubber
3	Holder	Polypropylene
4	Clinching Ring	Acetal
5	Locking Nut	Polypropylene

Assembly Procedures

1. Cut the pipe square with a proper pipe cutter. Clean the burr at the pipe end.

2. Mark the insertion depth on the pipe according to the 'Insertion Table'

3. Loosen the locking nut by one or two threads then insert the pipe into the fitting to the correct depth according to the 'Insertion Table'.

4. The locking nut can be tightly fastened by hand up to size 32mm and for sizes 40mm till 63mm, it is advisable to use strap wrench or other proper tools during installation.

5. To ensure the fitting is fully fastened, ascertain that the locking nut exceed the last threaded of the body.

Must clear the burr.

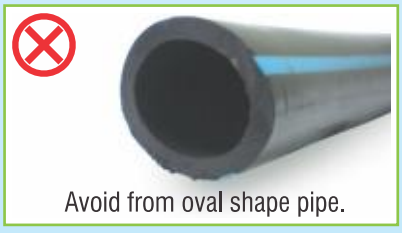

Avoid from oval shape pipe.

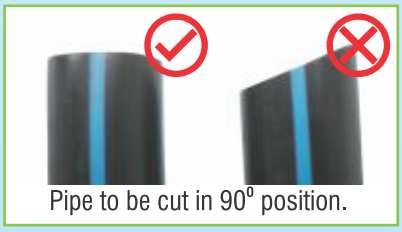

Pipe to be cut in 90^0 position.

Insertion Table

Pipe O.D (mm)	Insertion Depth (mm)
20	50
25	65
32	70
40	80
50	90
63	100
75	106
90	130

Flange Adaptor

Product Code	Size / mm	Approx. wt. gm / pc	Bolting		Standard Packing	
			Num	Size	bag	box
90-FLA16-316	63(OD) x 50(DN)	684	4	M16	30	20
90-FLA16-318	90(OD) x 80(DN)	1171	8	M16	15	9
90-FLA16-319	110(OD) x 100 (DN)	1748	8	M16	10	6

Pop-up Equal Bend

Product Code	Size	Approx. wt. gm / pc	Standard Packing	
			bag	box
90-PE-513	20 x 1/2"	72	300	200
90-PE-515	25 x 1/2"	114	180	120
90-PE-518	32 x 3/4"	169	100	80

Wall Plate Elbow

Product Code	Size	Approx. wt. gm / pc
90-WPE-516	25mm x 3/4"	85

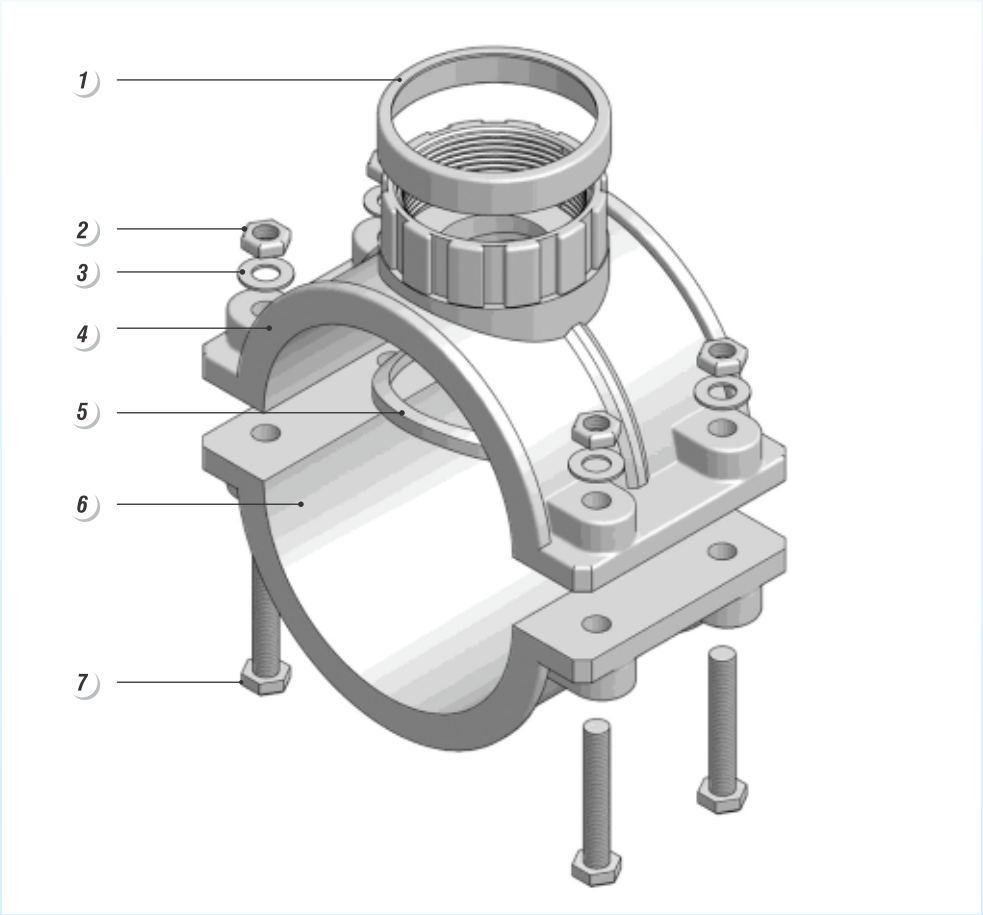

Components of a PP Clamp Saddle

Item	Name Of Part	Material
1	Reinforced Ring	Stainless Steel - Grade 304
2	Hexagon Nut	Mild Steel - Zinc Plated
3	Round Washer	Mild Steel - Zinc Plated
4	Body - Top	Reinforce Polypropylene
5	Gasket	Nitrile Butadiene Rubber
6	Body - Bottom	Reinforce Polypropylene
7	Hexagon Bolt	Mild Steel - Zinc Plated

Note: Stainless steel bolt, nut & washer available upon request.

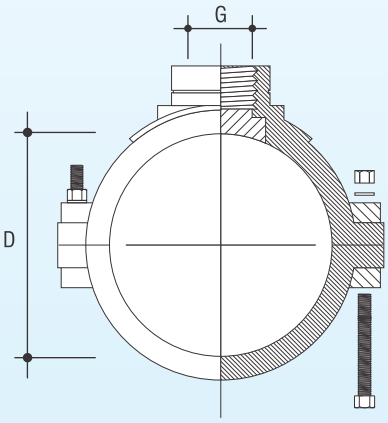

PP Clamp Saddle for used with PE and other Metric Polymer Pipe

Product Code	D x G / mm x BSP	nos. of Bolt & Nut	Approx. wt. kg / pc	Standard Packing bag(pcs)	box(pcs)
CS587CP	32 x 1/2"	2	0.20	240	160
CS518CP	32 x 3/4"	2	0.20	240	160
CS519CP	32 x 1"	2	0.20	240	160
CS594CP	40 x 1/2"	2	0.20	180	150
CS559CP	40 x 3/4"	2	0.20	180	150
CS520CP	40 x 1"	2	0.21	180	150
CS574CP	50 x 1/2"	2	0.21	150	150
CS523CP	50 x 3/4"	2	0.20	150	150
CS524CP	50 x 1"	2	0.21	150	150
CS575CP	63 x 1/2"	4	0.25	100	80
CS528CP	63 x 3/4"	4	0.25	100	80
CS529CP	63 x 1"	4	0.25	100	80
CS586CP	63 x 1 1/4"	4	0.26	100	80
CS576CP	75 x 1/2"	4	0.34	60	50
CS570CP	75 x 3/4"	4	0.34	60	50
CS571CP	75 x 1"	4	0.34	60	50
CS572CP	75 x 1 1/4"	4	0.35	60	50
CS573CP	75 x 1 1/2"	4	0.36	60	50
CS532CP	75 x 2"	4	0.38	60	50
CS577CP	90 x 1/2"	4	0.39	40	30
CS534CP	90 x 3/4"	4	0.38	40	30
CS535CP	90 x 1"	4	0.39	40	30
CS564CP	90 x 1 1/4"	4	0.40	40	30
CS565CP	90 x 1 1/2"	4	0.40	40	30
CS536CP	90 x 2"	4	0.43	40	30
CS578CP	110 x 1/2"	4	0.50	40	30
CS538CP	110 x 3/4"	4	0.50	40	30
CS539CP	110 x 1"	4	0.50	40	30
CS560CP	110 x 1 1/4"	4	0.51	40	30
CS561CP	110 x 1 1/2"	4	0.51	40	30
CS540CP	110 x 2"	4	0.53	40	30

Note: NBR 'O' Ring used for size 32-50mm
3D Gasket used for size 63mm-110mm

PP Clamp Saddle for used with PE and other Metric Polymer Pipe

Product Code	D x G / mm x BSP	nos. of Bolt & Nut	Approx. wt. kg / pc	Standard Packing bag(pcs)	box(pcs)
CS579CP	125 x 1/2"	4	0.65	30	24
CS541CP	125 x 3/4"	4	0.65	30	24
CS542CP	125 x 1"	4	0.69	30	24
CS566CP	125 x 1 1/4"	4	0.64	30	24
CS543CP	125 x 2"	4	0.66	30	24

Note: 3D Gasket used

PP Clamp Saddle for used with PE and other Metric Polymer Pipe

Product Code	D x G / mm x BSP	nos. of Bolt & Nut	Approx. wt. kg / pc	Standard Packing bag(pcs)	box(pcs)
CS580CP	160 x 1/2"	6	0.66	20	15
CS544CP	160 x 3/4"	6	1.01	20	15
CS545CP	160 x 1"	6	1.01	20	15
CS562CP	160 x 1 1/4"	6	1.04	20	15
CS563CP	160 x 1 1/2"	6	1.00	20	15
CS546CP	160 x 2"	6	1.04	20	15
CS547CP	180 x 3/4"	6	1.66	15	10
CS548CP	180 x 1"	6	1.66	15	10
CS592CP	180 x 1 1/4"	6	1.63	15	10
CS593CP	180 x 1 1/2"	6	1.65	15	10
CS549CP	180 x 2"	6	1.67	15	10
CS595CP	200 x 1"	6	1.69	12	8
CS597CP	200 x 1 1/4"	6	1.70	12	8
CS596CP	200 x 1 1/2"	6	1.69	12	8
CS599CP	200 x 2"	6	1.67	12	8
CS550CP	225 x 3/4"	6	2.34	10	6
CS551CP	225 x 1"	6	2.38	10	6
CS567CP	225 x 1 1/4"	6	2.38	10	6
CS552CP	225 x 2"	6	2.38	10	6

Note: 3D Gasket used

PP Clamp Saddle - Double Outlet for used with PE and other Metric Polymer Pipe

Product Code	D x G_1 x G_2 / mm x BSP x BSP	nos. of Bolt & Nut	Approx. wt. kg / pc	Standard Packing bag (pcs)
DS721CP	* 32 x 3/4" x 3/4"	2	0.16	200
DS722CP	* 32 x 1" x 3/4"	2	0.17	200
DS723CP	* 32 x 1" x 1"	2	0.18	200
DS765CP	* 40 x 3/4" x 3/4"	2	0.17	150
DS766CP	* 40 x 1" x 3/4"	2	0.18	150
DS767CP	* 40 x 1" x 1"	2	0.18	150
DS724CP	* 50 x 3/4" x 3/4"	2	0.17	120
DS725CP	* 50 x 1" x 3/4"	4	0.18	120
DS726CP	* 50 x 1" x 1"	4	0.18	120
DS727CP	* 63 x 3/4" x 3/4"	4	0.28	80
DS728CP	* 63 x 1" x 3/4"	4	0.28	80
DS729CP	* 63 x 1" x 1"	4	0.28	80

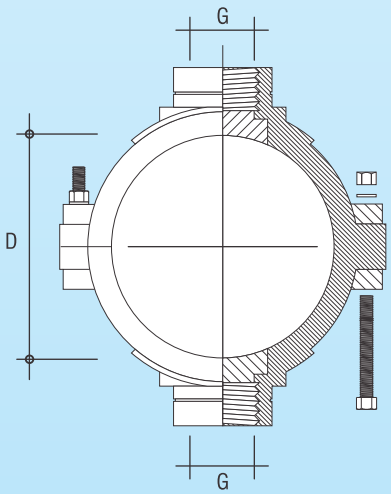

Note: NBR 'O' Ring used for size 32-50mm
3D Gasket used for size 63mm-110mm

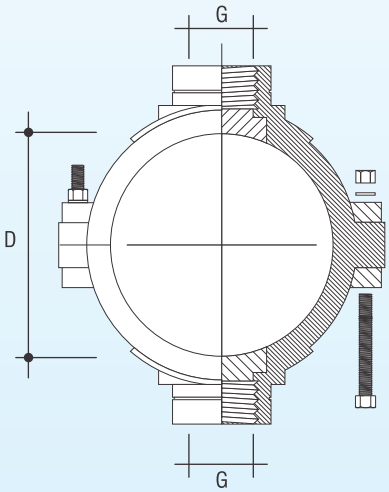

PP Clamp Saddle - Double Outlet for used with PE and other Metric Polymer Pipe

Product Code	D x G_1 x G_2 / mm x BSP x BSP	nos. of Bolt & Nut	Approx. wt. kg / pc	Standard Packing bag (pcs)
DS771CP	* 75 x 3/4" x 3/4"	4	0.34	50
DS773CP	* 75 x 1" x 1"	4	0.37	50
DS774CP	* 75 x 1" x 3/4"	4	0.36	50
DS777CP	* 75 x 2" x 1"	4	0.41	50
DS776CP	* 75 x 2" x 2"	4	0.45	50
DS730CP	* 90 x 3/4" x 3/4"	4	0.40	25
DS731CP	* 90 x 1" x 3/4"	4	0.41	25
DS732CP	* 90 x 1" x 1"	4	0.41	25
DS783CP	* 90 x 1 1/4" x 1 1/4"	4	0.43	25
DS733CP	* 90 x 2" x 1"	4	0.45	25
DS734CP	* 90 x 2" x 2"	4	0.50	25
DS735CP	* 110 x 3/4" x 3/4"	4	0.54	24
DS736CP	* 110 x 1" x 3/4"	4	0.53	24
DS737CP	* 110 x 1" x 1"	4	0.53	24
DS790CP	* 110 x 1 1/4" x 1 1/4"	4	0.55	24
DS738CP	* 110 x 2" x 3/4"	4	0.57	24
DS739CP	* 110 x 2" x 1"	4	0.56	24
DS740CP	* 110 x 2" x 2"	4	0.65	24

Note: NBR 'O'Ring used for size 32mm-50mm
3D Gasket used for size 63mm-110mm

PP Clamp Saddle - Double Outlet for used with PE and other Metric Polymer Pipe

Product Code	D x G_1 x G_2 / mm x BSP x BSP	nos. of Bolt & Nut	Approx. wt. kg / pc	Standard Packing bag (pcs)
DS747CP	125 x 3/4" x 3/4"	4	0.66	20
DS749CP	125 x 1" x 1"	4	0.72	20
DS752CP	125 x 2" x 2"	4	0.73	20
DS741CP	160 x 3/4" x 3/4"	6	1.07	12
DS742CP	160 x 1" x 3/4"	6	1.09	12
DS743CP	160 x 1" x 1"	6	1.10	12
DS797CP	160 x 1 1/4" x 1 1/4"	6	1.12	12
DS744CP	160 x 2" x 3/4"	6	1.09	12
DS745CP	160 x 2" x 1"	6	1.10	12
DS746CP	160 x 2" x 2"	6	1.10	12
DS753CP	180 x 3/4" x 3/4"	6	1.73	8
DS754CP	180 x 1" x 1"	6	1.69	8
DS758CP	180 x 2" x 2"	6	1.79	8
DS759CP	225 x 3/4" x 3/4"	6	2.23	6
DS760CP	225 x 1" x 3/4"	6	2.30	6
DS761CP	225 x 1" x 1"	6	2.44	6
DS762CP	225 x 2" x 3/4"	6	2.23	6
DS763CP	225 x 2" x 1"	6	2.34	6
DS764CP	225 x 2" x 2"	6	2.23	6

Note: 3D Gasket used

Under Pressure PP Tapping Ferrule with Cutter - Threaded Outlet

Patent No: MY-128043-A

Product Code	D x G / BSP x BSP	Approx. wt. gm / pc	Standard Packing bag(pcs)	box(pcs)
TFT116MF	1 1/4" x 3/4"	231	100	80
TFT113MF	1 1/4" x 1"	238	100	80
TFT112MF	1" x 3/4"	250	100	80
TFT111MF	1" x 1"	256	100	80

Note: Cutter are available in following material:-
- Carbon Steel
- Plastic Threaded with Stainless Steel

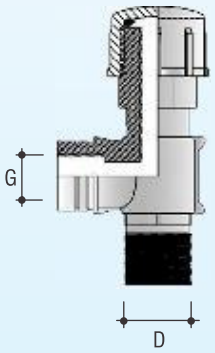

Under Pressure PP Tapping Ferrule with Cutter- Compression Joint Outlet

Patent No: MY-128043-A

Product Code	D x G / BSP x BSP	Approx. wt. gm/ pc	Standard Packing bag(pcs)	box(pcs)
TFC117MF	1 1/4" x 20mm	251	100	80
TFC116MF	1 1/4" x 25mm	263	100	80
TFC113MF	1 1/4" x 32mm	289	100	80
TFC115MF	1" x 20mm	260	100	80
TFC112MF	1" x 25mm	280	100	80
TFC111MF	1" x 32mm	290	100	80

Note: Cutter are available in following material:-
- Carbon Steel
- Plastic Threaded with Stainless Steel

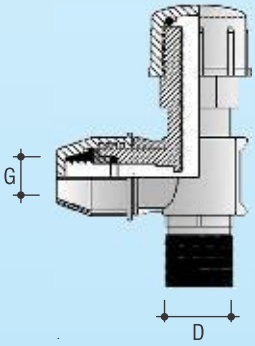

Fig.1

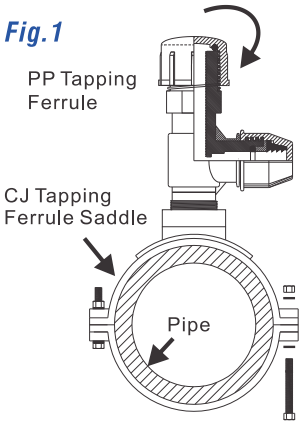

Fig.2

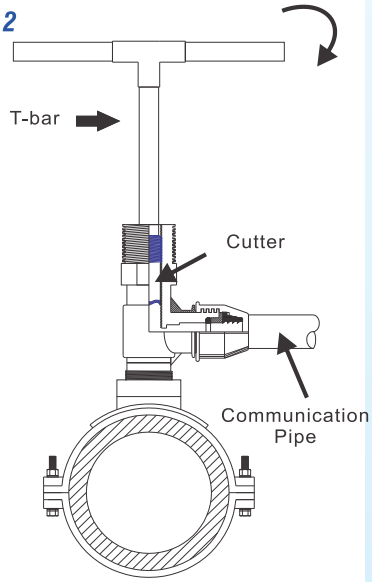

Fig.3

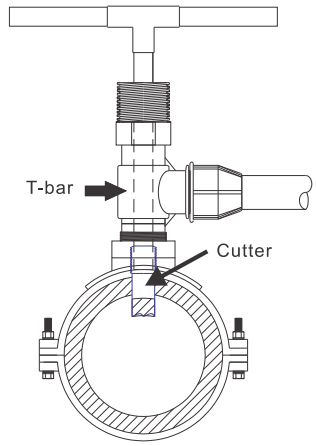

Fig.4

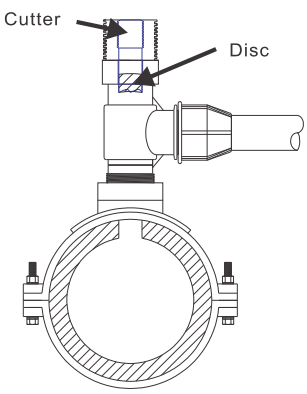

CJ Tapping Ferrule for PE Pipes & uPVC Pipes

Item	Name Of Part	Material
1	Tapping Ferrule Cap	Polypropylene
2	Rubber 'O' Ring	Nitrile Butadiene Rubber
3	Cutter	Carbon Steel / Plastic Threaded with Stainless Steel
4	Tapping Ferrule Body	Polypropylene
5	Reinforce Ring	Stainless Steel 304
6	Tapping Ferrule Saddle	Polypropylene
7	Gasket	Nitrile Butadiene Rubber
8	Hexagon Nut	Mild Steel - Zinc Plated (Stainless Steel 304 available upon request)
9	Hexagon Bolt	Mild Steel - Zinc Plated (Stainless Steel 304 available upon request)

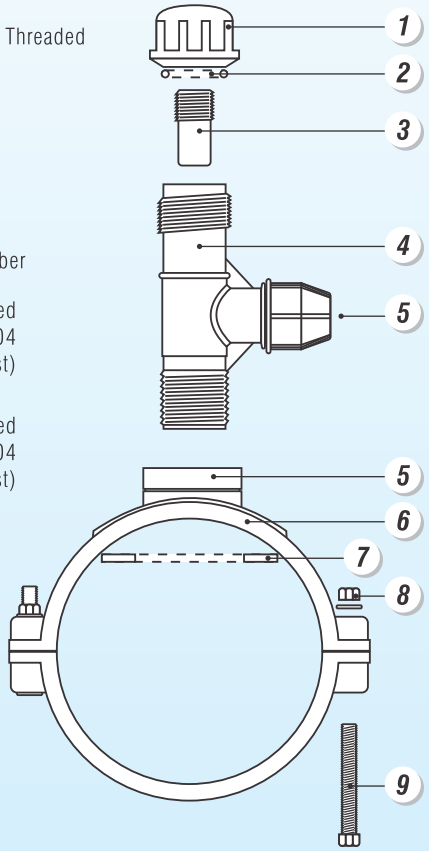

PP Tapping Ferrule For Thermoplastic Pipe - Installation Guide

1. Fix the PP Tapping Ferrule onto the PP Clamp Saddle outlet by turning the PP Tapping Ferrule in clockwise direction. (Figure 1)
2. Make sure that the rubber gasket sits properly in the groove of the saddle.
3. Clamp the PP Saddle onto the main pipe by fastening the bolts and nuts. (Figure 1)
4. Connect the communication pipe to the PP Tapping Ferrule outlet.
5. To perform tapping, remove the cap, insert the T-bar onto the recess of the cutter. (Figure 2)
6. Turn the T-bar in clockwise direction until the cutter cut through the pipe wall. (Figure 3)
7. Retain the disc cut from the pipe, act as stopper.
8. Reverse the cutter until it flushes with the top of the stack. At this stage, the PP Tapping Ferrule is in open position. (Figure 4)
9. Remove the T-bar, tighten on the cap.

Welding Procedures

Cut the pipe to the required length, perpendicular to the axis.

Mark the required insertion depth and position on the pipe and fitting before jointing.

Use a Peeling Tool to remove the oxidized layer on the pipe surface.

For pipe sizes, 20mm O.D. & 25mm O.D., insert stiffener into the pipe.
(Only for pipe of SDR 11)

Make sure heating tool is free from contamination by wiping the socket & spigot heating elemants with a clean cloth and suitable cleaning agent.
Set the temperature to the required temperature of 260°C ± 10°C

Push the pipe and fitting onto the heating elements as far as the stop, pipe onto the socket & fitting onto the spigot. Hold them firmly to achieve the heating time according to the welding parameter table.

When heating time has elapsed, quickly pull out the pipe and fitting from the heating elements, and push them together axially. Refer to the welding parameter table for the change over time and cooling off period.

In the duration of the change over time, align the pipe and fitting properly.
Do not twist or bend during the cooling off period.

Refer to page 22 for welding parameters.

Homo Fuse Polyethylene (PE) Socket Fusion Fittings

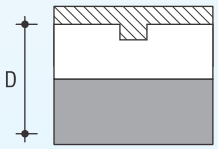

Straight Coupler

Product Code	D / mm	Approx. wt. gm / pc	Standard Packing bag(pcs)
SC311SF	20	13	1200
SC312SF	25	19	800
SC313SF	32	30	600
SC315SF	50	69	250
SC316SF	63	129	100

Equal Tee

Product Code	D / mm	Approx. wt. gm / pc	Standard Packing bag(pcs)
ET311SF	20	27	700
ET312SF	25	38	500
ET313SF	32	70	300
ET315SF	50	177	100
ET316SF	63	318	50

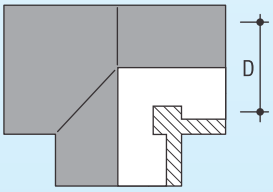

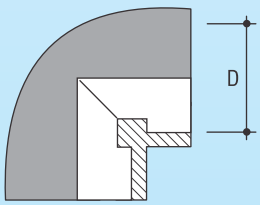

Elbow 90°

Product Code	D / mm	Approx. wt. gm / pc	Standard Packing bag(pcs)
EB311SF	20	20	1000
EB312SF	25	21	700
EB313SF	32	51	400
EB315SF	50	118	150
EB316SF	63	230	60

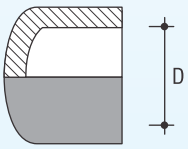

End Cap

Product Code	D / mm	Approx. wt. gm / pc	Standard Packing bag(pcs)
EC311SF	20	11	2000
EC312SF	25	15	1500
EC313SF	32	25	800

Reducing Coupler

Product Code	D_1 x D_2 / mm	Approx. wt. gm / pc	Standard Packing bag(pcs)
RC611SF	25 x 20	22	800
RC612SF	32 x 20	25	600
RC613SF	32 x 25	27	600
RC616SF	50 x 32	62	300
RC618SF	63 x 32	104	150
RC620SF	63 x 50	119	150

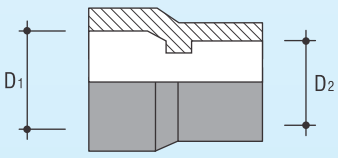

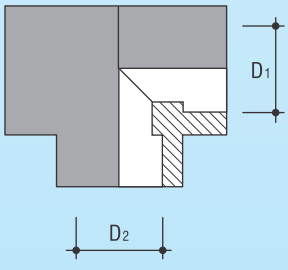

Reducing Tee

Product Code	D_1 x D_2 / mm	Approx. wt. gm / pc	Standard Packing bag(pcs)
RT611SF	25 x 20	36	500
RT612SF	32 x 20	63	300
RT613SF	32 x 25	64	300

Homo Fuse Polyethylene (PE) Socket Fusion Fittings

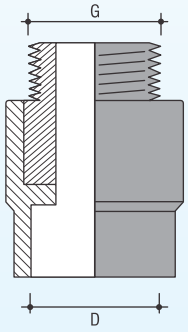

Male Threaded Adaptor with Brass Insert

Product Code	D x G / mm x BSP	Approx. wt. gm / pc	Standard Packing box(pcs)
MA513SFB	20 x 1/2"	69	600
MA515SFB	25 x 1/2"	80	400
MA516SFB	25 x 3/4"	113	400
MA518SFB	32 x 3/4"	170	250
MA519SFB	32 x 1"	178	250

Female Threaded Adaptor with Brass Insert

Product Code	D x G / mm x BSP	Approx. wt. gm / pc	Standard Packing box(pcs)
FA513SFB	20 x 1/2"	60	600
FA515SFB	25 x 1/2"	67	400
FA516SFB	25 x 3/4"	73	400
FA518SFB	32 x 3/4"	84	250
FA519SFB	32 x 1"	111	250

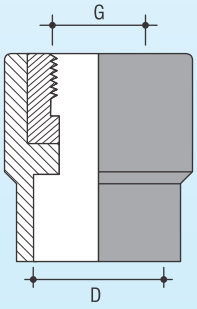

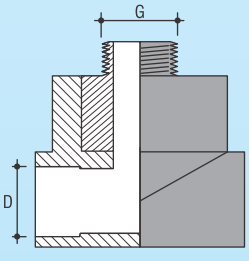

Male Threaded Tee with Brass Insert

Product Code	D x G / mm x BSP	Approx. wt. gm / pc	Standard Packing box(pcs)
MT513SFB	20 x 1/2"	130	400
MT515SFB	25 x 1/2"	130	250
MT516SFB	25 x 3/4"	136	250
MT518SFB	32 x 3/4"	210	150
MT519SFB	32 x 1"	440	150

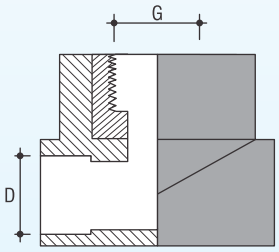

Female Threaded Tee with Brass Insert

Product Code	D x G / mm x BSP	Approx. wt. gm / pc	Standard Packing box(pcs)
FT513SFB	20 x 1/2"	80	400
FT515SFB	25 x 1/2"	80	250
FT516SFB	25 x 3/4"	89	250
FT518SFB	32 x 3/4"	140	150
FT519SFB	32 x 1"	300	150

Male Threaded Elbow 90° with Brass Insert

Product Code	D x G / mm x BSP	Approx. wt. gm / pc	Standard Packing box(pcs)
MB513SFB	20 x 1/2"	120	500
MB515SFB	25 x 1/2"	168	300
MB516SFB	25 x 3/4"	170	300
MB518SFB	32 x 3/4"	200	200
MB519SFB	32 x 1"	233	200

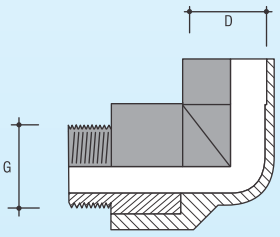

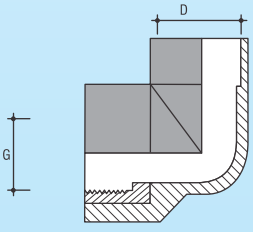

Female Threaded Elbow 90° with Brass Insert

Product Code	D x G / mm x BSP	Approx. wt. gm / pc	Standard Packing box(pcs)
FB513SFB	20 x 1/2"	70	500
FB515SFB	25 x 1/2"	80	300
FB516SFB	25 x 3/4"	83	300
FB518SFB	32 x 3/4"	110	200
FB519SFB	32 x 1"	270	200

Homo Fuse Polyethylene (PE) Socket Fusion Fittings

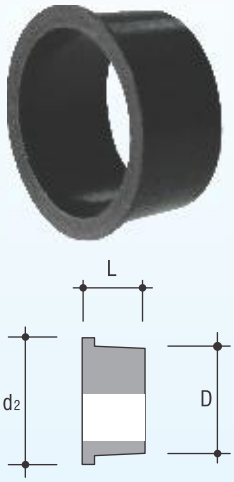

Pipe Stiffener

Product Code	D / mm	d_2 / mm	L / mm	Approx. wt. gm / pc
PS311SF	20	13	10	10
PS312SF	25	18	11	10

Peeling Tool

Product Code	Size / mm	Approx. wt. gm / pc
PT311SF	20	60
PT312SF	25	70
PT313SF	32	90

Socket Fusion Heating Tool

Product Code	Size / mm	Approx. wt. kg / pc
SFU001SF	20 mm to 32 mm	7.29
SFU002SF	16 mm to 63 mm	7.96

Socket Fusion Welding Parameter

Pipe Outside Dia. mm	Minimum Wall Thickness mm	Heating Time second	Maximum Change Over Time second	Minimum Cooling Time minute
20	2.3	5	4	2
25	2.3	7	4	2
32	3.0	8	5	4
50	4.6	18	5	4
63	5.8	24	6	6

Refer to page 17 for welding procedures.

Bend 45° - Fabricated : SDR 11, PE80

Product Code	d / mm	le / mm	r / mm	Approx. wt. kg / pc	Standard Packing bag(pcs)
E4317BF	75	150	113	1.00	15
E4318BF	90	150	135	1.50	10
E4319BF	110	150	165	1.78	8
E4320BF	125	150	188	1.98	6
E4321BF	160	150	240	3.90	4
E4322BF	180	150	270	5.15	3
E4323BF	200	150	300	6.50	1
E4324BF	225	150	338	9.00	1
E4325BF	250	250	375	15.10	NIL
E4326BF	280	250	420	19.98	NIL
E4327BF	315	300	473	29.88	NIL
E4328BF	355	300	533	42.62	NIL
E4329BF	400	300	600	66.83	NIL
E4330BF	450	300	675	78.40	NIL

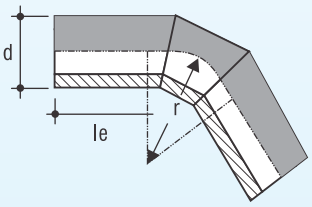

Note: SDR 21, SDR 17 & SDR 13.6 and PE100 available upon request.

Bend 90° - Fabricated : SDR 11, PE80

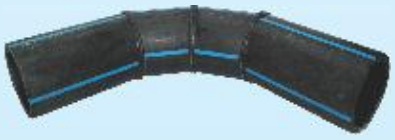

Product Code	d / mm	le / mm	r / mm	Approx. wt. kg / pc	Standard Packing bag(pcs)
E9317BF	75	150	113	1.17	10
E9318BF	90	150	135	1.43	8
E9319BF	110	150	165	2.00	6
E9320BF	125	150	188	1.81	5
E9321BF	160	150	240	5.60	3
E9322BF	180	150	270	6.70	2
E9323BF	200	150	300	9.50	1
E9324BF	225	150	338	13.00	1
E9325BF	250	250	375	17.05	NIL
E9326BF	280	250	420	21.05	NIL
E9327BF	315	300	473	45.10	NIL
E9328BF	355	300	533	58.61	NIL
E9329BF	400	300	600	79.95	NIL
E9330BF	450	300	675	95.05	NIL

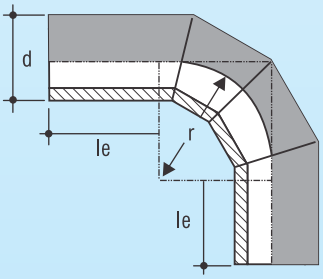

Note: SDR 21, SDR 17 & SDR 13.6 and PE100 available upon request.

PE Spigot Fittings For Butt Fusion

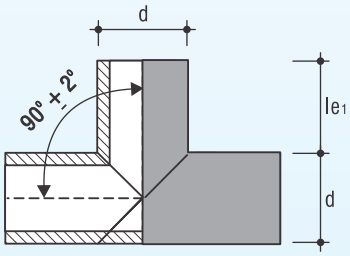

Equal Tee - Fabricated: SDR 11, PE80

Product Code	d / mm	Approx. Wt. kg / pc	Standard Packing bag (pcs)
T317BF	75	1.05	10
T318BF	90	1.30	8
T319BF	110	1.97	5
T320BF	125	3.00	4
T321BF	160	5.18	3
T322BF	180	7.38	2
T323BF	200	9.00	1
T324BF	225	10.50	1
T325BF	250	15.00	NIL
T326BF	280	21.42	NIL
T327BF	315	32.09	NIL
T328BF	355	41.96	NIL
T329BF	400	54.90	NIL

Note: SDR 21, SDR 17 & SDR 13.6 and PE100 available upon request.

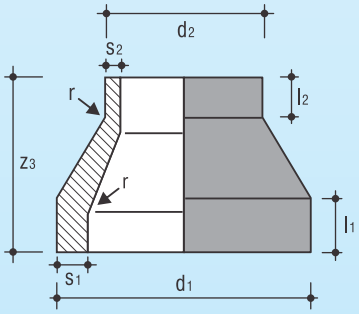

Reducer For Butt Fusion: SDR 11, PE80

Product Code	d_1 x d_2 / mm	l_1 / mm	l_2 / mm	z_3 / mm	s_1 x s_2 / mm	Approx. Wt. kg / pc	Standard Packing bag(pcs)
RD622BF	90 x 63	22	16	75	8.20 x 5.80	0.14	60
RD624BF	110 x 63	28	16	90	10.00 x 5.80	0.18	50
RD625BF	110 x 90	28	22	90	10.00 x 8.20	0.26	50
RD627BF	125 x 90	32	22	100	11.40 x 8.20	0.34	40
RD629BF	160 x 90	40	22	120	14.60 x 8.20	0.63	35
RD630BF	160 x 110	40	28	120	14.60 x 10.00	0.66	30
RD632BF	180 x 90	45	22	130	16.40 x 8.20	0.80	20
RD655BF	180 x 110	45	28	130	16.40 x10.00	0.89	20
RD633BF	180 x 125	45	32	130	16.40 x 11.40	0.98	20
RD693BF	200 x 110	50	28	145	18.50 x 10.00	1.13	14
RD0622BF	200 x 125	50	32	145	18.50 x 11.40	1.29	14
RD634BF	200 x 160	50	40	145	18.50 x 14.60	1.42	14
RD678BF	200 x 180	50	45	145	18.50 x 16.40	1.56	14
RD635BF	225 x 160	55	40	160	20.50 x 14.60	1.77	12
RD636BF	225 x 180	55	45	160	20.50 x 16.40	1.90	12
RD689BF	250 x 110	60	35	175	22.70 x 10.00	1.67	10
RD637BF	250 x 160	60	40	175	22.70 x 14.60	★	10
RD638BF	250 x 180	60	45	175	22.70 x 16.40	2.22	10

★ Available upon request

Note: SDR 21, SDR 17 & SDR 13.6 and PE100 available upon request.

Stub End - Short Collar: SDR 11, PE80

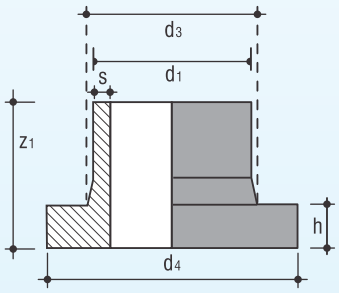

Product Code	d_1 / mm	d_3 / mm	d_4 / mm	z_1 / mm	s / mm	h / mm	Approx. Wt. kg / pc	Standard Packing bag(pcs)
SE316BF	63	75	102	50	5.80	14	0.13	150
SE318BF	90	105	130	80	8.20	17	0.31	50
SE319BF	110	125	158	80	10.00	18	0.46	40
SE320BF	125	132	158	80	11.40	25	0.51	30
SE321BF	160	175	212	80	14.60	25	0.94	20
SE322BF	180	181	212	80	16.40	30	0.97	20
SE323BF	200	232	268	100	18.20	32	1.85	12
SE324BF	225	235	268	100	20.50	32	1.85	12
SE325BF	250	285	320	100	22.70	35	2.90	8
SE326BF	280	291	320	110	25.40	35	2.91	7
SE327BF	315	335	370	110	28.60	35	3.92	5
SE328BF	355	373	430	120	32.20	40	5.42	4
SE329BF	400	427	482	120	36.30	46	7.38	1
SE330BF	450	514	550	130	40.90	46	7.50	1
SE331BF	500	530	585	130	45.40	46	10.05	1

Note: SDR 21, SDR 17 & SDR 13.6 and PE100 available upon request.

Stub End - Long Collar: SDR 11, PE80

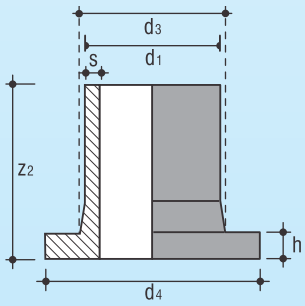

Product Code	d_1 / mm	d_3 / mm	d_4 / mm	z_2 / mm	s / mm	h / mm	Approx. Wt. kg / pc	Standard Packing bag (pcs)
SE(L)311BF	# 20	27	45	85	2.30	7	0.02	400
SE(L)312BF	25	33	58	85	2.30	9	0.04	300
SE(L)313BF	32	40	68	85	3.00	10	0.06	200
SE(L)315BF	50	61	88	85	4.60	12	0.11	150
SE(L)316BF	63	75	102	95	5.80	14	0.17	100
SE(L)318BF	90	105	130	140	8.20	17	0.44	40
SE(L)319BF	110	125	158	160	10.00	18	0.72	20
SE(L)320BF	125	132	158	170	11.40	25	0.90	20
SE(L)321BF	160	175	212	200	14.60	25	1.74	10
SE(L)322BF	180	181	212	200	16.40	30	2.00	9
SE(L)323BF	200	232	268	200	18.20	32	2.91	6
SE(L)324BF	225	235	268	200	20.50	32	3.25	6
SE(L)325BF	250	285	320	200	22.70	35	4.80	4
SE(L)326BF	280	291	320	200	25.40	35	4.90	3
SE(L)327BF	315	335	370	200	28.60	35	7.00	2
SE(L)328BF	*355	373	430	280	32.20	40	9.99	1
SE(L)329BF	*400	427	482	320	36.30	46	10.12	1
SE(L)330BF	*450	514	550	330	40.90	46	10.80	1

denote - SDR 9

* Have section of pipe welded to the moulding

Note: SDR 21, SDR 17 & SDR 13.6 and PE100 available upon request.

PE Spigot Fittings For Butt Fusion

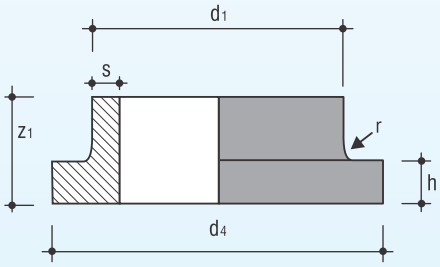

Stub End - Short Collar (Reduction Type): SDR 11, PE80

Product Code	d_1 / mm	h / mm	d_4 / mm	z_1 / mm	s / mm	Approx. Wt. kg / pc	Standard Packing bag (pcs)
SE340BF	250	35	274	100	22.70	2.80	8
SE342BF	315	35	329	100	28.60	4.00	5
SE336BF	355	40	385	120	32.20	4.95	5
SE337BF	400	46	440	120	36.30	6.90	1
SE338BF	450	46	550	120	40.90	7.05	1
SE339BF	500	46	795	130	45.40	8.00	1

Note: SDR 21, SDR 17 & SDR 13.6 and PE100 available upon request.

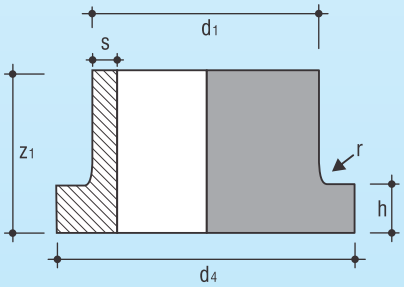

Stub End - Long Collar (Reduction Type): SDR 11, PE80

Product Code	d_1 / mm	h / mm	d_4 / mm	z_1 / mm	s / mm	Approx. Wt. kg / pc	Standard Packing bag(pcs)
SE(L)340BF	250	35	274	200	22.70	4.65	4
SE(L)342BF	315	35	329	200	28.60	6.50	2
SE(L)336BF	355	43	390	290	29.40	9.00	2
SE(L)337BF	* 400	46	495	200	36.30	8.80	1
SE(L)338BF	* 450	46	550	200	40.90	9.30	1

* Have section of pipe welded to the moulding

Note: SDR 21, SDR 17 & SDR 13.6 and PE100 available upon request.

Spigot End Cap: SDR 11, PE80

Product Code	d_1 / mm	l / mm	s / mm	Approx. Wt. kg / pc	Standard Packing bag(pcs)
EC316BF	63	60	5.80	0.10	150
EC318BF	90	90	8.20	0.32	40
EC319BF	110	90	10.00	0.46	30
EC320BF	125	90	11.40	0.60	20
EC321BF	160	120	14.60	1.30	16
EC322BF	180	130	14.80	1.50	15

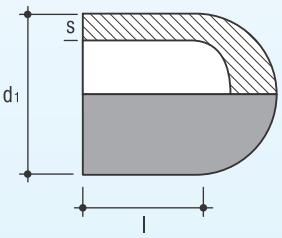

Note: SDR 21, SDR 17 & SDR 13.6 and PE100 available upon request.

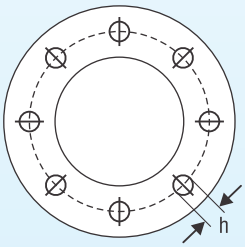

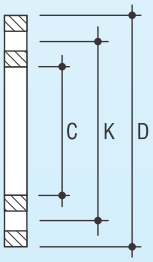

Backing Ring PN 16(Slip- on Flange) To Suit PE Pipe

Product Code	Pipe O.D. mm	Nominal Dia. mm	Flange		Pitch Circle Dia. K / mm	Bolt Hole Dia. h / mm	Bolt	
			Outer Dia. D / mm	Inner Dia. C / mm			Size mm	Nos.
xxx311TR	20	* 15	95	30	65	11	10	4
xxx312TR	25	* 20	105	36	75	14	12	4
xxx313TR	32	* 25	115	44	85	14	12	4
xxx314TR	40	* 32	140	53	100	18	16	4
xxx315TR	50	* 40	150	65	110	18	16	4
xxx316TR	63	* 50	165	78	125	18	16	4
xxx317TR	75	* 65	185	92	145	18	16	4
xxx318TR	90	* 80	200	108	160	18	16	8
xxx319TR	110	* 100	220	128	180	18	16	8
xxx320TR	125	* 100	220	135	180	18	16	8
xxx321TR	160	* 150	285	178	240	22	20	8
xxx322TR	180	* 150	285	188	240	22	20	8
xxx323TR	200	* 200	340	235	295	22	20	12
xxx324TR	225	200	340	238	295	22	20	12
xxx325TR	250	250	405	288	355	26	24	12
xxx326TR	280	250	405	294	355	26	24	12
xxx342TR	315	250	405	320	355	26	24	12
xxx327TR	315	300	460	338	410	26	24	12
xxx336TR	355	300	460	360	410	26	24	12
xxx328TR	355	350	520	376	470	26	24	16
xxx337TR	400	350	520	405	470	26	24	16
xxx329TR	400	400	580	430	525	30	27	16
xxx338TR	450	400	580	455	525	30	27	16
xxx330TR	450	450	640	517	585	30	27	20
xxx339TR	500	450	640	505	585	30	30	20
xxx331TR	500	500	715	533	650	33	30	20
xxx332TR	560	600	840	618	770	36	33	20
xxx333TR	630	600	840	645	770	36	33	20

** denote Suitable For PN 10 also*

Backing Rings are available in the following materials :-

		Product Code
Mild Steel, Hot Dipped Ped Galvanised	-	232xxxxx
Mild Steel, Fusion Bonded Epoxy Powder (FBEP) coated	-	240xxxxx
Ductile Iron, Bituminous coated	-	236xxxxx
Ductile Iron, Fusion Bonded Epoxy Powder coated	-	231xxxxx

Drilling dimensions comply to BS 4504 / BS EN 1092:1997 - PN 16
Other dimensions are available upon request

Full Face Rubber Gasket - PN 16

Product Code	Nominal Dia. / mm	Approx. Wt. kg / pc
244315TR	50*	0.05
244317TR	65*	0.08
244318TR	80*	0.13
244319TR	100*	0.14
244321TR	150*	0.15
244324TR	200*	0.26
244325TR	250	0.43
244327TR	300	0.50
244307TR	450	0.58

** Similar to PN10*

PP Threaded Fittings

Hexagon Nipple

Product Code	Size BSP	Approx. wt. kg / 100 pcs	Standard Packing bag(pcs)	box(pcs)
105410AF	1/2"	0.90	2000	1600
105411AF	3/4"	1.40	1200	1000
105412AF	1"	2.50	800	600
105413AF	1 1/4"	4.20	500	400
105414AF	1 1/2"	5.00	400	300
105416AF	2"	8.00	200	150
105422AF	3"	15.60	80	60
105428AF	4"	29.50	50	40

Hexagon Reducing Nipple

Product Code	Size BSP	Approx. wt. kg / 100 pcs	Standard Packing bag(pcs)	box(pcs)
106110AF	3/4" X 1/2"	1.30	1200	1000
106112AF	1" X 3/4"	2.20	800	600
106125AF	2" X 1 1/2"	6.50	300	200
106123AF	2" X 1"	6.10	300	200
106115AF	3" X 2"	15.20	100	60
106170AF	4" X 3"	27.40	50	40

Hexagon Bush

Product Code	Size BSP	Approx. wt. kg / 100 pcs	Standard Packing bag(pcs)	box(pcs)
107110AF	3/4 X 1/2"	0.40	3000	2400
107115AF	1" X 1/2"	1.60	1200	1000
107112AF	1" X 3/4"	1.10	1200	1000

Twin Arm Sprinkler - Model 388

Product Code	Size BSP	Approx. wt. kg / 100 pcs	Discharge Capacity at 1 bar pressure	Spraying Radius at 1 bar pressure	Standard Packing bag (pcs)
A10101110	3/4" M x 1/2" F	6.00	13 *lpm*	3.2 m	250

Single Arm Sprinkler - Model 328

Product Code	Size BSP	Approx. wt. kg / 100 pcs	Discharge Capacity at 1 bar pressure	Spraying Radius at 1 bar pressure	Standard Packing bag (pcs)
A10102110	3/4" M x 1/2" F	5.40	13 *lpm*	3.5 m	250

Butterfly Sprinkler - Model 825

Product Code	Size BSP	Approx. wt. kg / 100 pcs	Discharge Capacity at 1 bar pressure	Spraying Radius at 1 bar pressure	Standard Packing bag (pcs)
A10103410	1/2" F	3.50	9 *lpm*	4.7 m	500

Butterfly Sprinkler - Model 628

Product Code	Size BSP	Approx. wt. kg / 100 pcs	Discharge Capacity at 1 bar pressure	Spraying Radius at 1 bar pressure	Standard Packing bag (pcs)
A10104410	3/4" M	3.50	17 *lpm*	3.7 m	500

Butterfly Sprinkler - Model 128, 228

Product Code	Size BSP	Approx. wt. kg / 100 pcs	Discharge Capacity at 1 bar pressure	Spraying Radius at 1 bar pressure	Standard Packing bag (pcs)
A10105410	128 - 1/2" M	3.50	9 *lpm*	4.5 m	500
A10105411	228 - 3/4" M	3.50	16 *lpm*	4.5 m	500

Micro Sprinkler - Model 428

Product Code	Size BSP	Approx. wt. kg / 100 pcs	Discharge Capacity at 1 bar pressure	Spraying Radius at 1 bar pressure	Standard Packing bag (pcs)
A10106410	1/2" M	0.90	2 *lpm*	2.6 m	100

Short Arm Sprinkler - Model 280

Product Code	Size BSP	Approx. wt. kg / 100 pcs	Discharge Capacity at 1 bar pressure	Spraying Radius at 1 bar pressure	Standard Packing bag (pcs)
A10107411	3/4" M	6.30	14.5 *lpm*	6.5 m	250

Long Arm Sprinkler - Model 323

Product Code	Size BSP	Approx. wt. kg / 100 pcs	Discharge Capacity at 1 bar pressure	Spraying Radius at 1 bar pressure	Standard Packing bag (pcs)
A10108411	3/4" M	6.70	14 *lpm*	6.5 m	250
A10108411-F	3/4" F	6.70	14 *lpm*	6.5 m	250

G Sprinkler - Model 603

Product Code	Size BSP	Approx. wt. kg / 100 pcs	Discharge Capacity at 1 bar pressure	Spraying Radius at 1 bar pressure	Standard Packing bag (pcs)
A10109410	1/2" M	1.50	8 *lpm*	2.9 m	100

G Sprinkler - Model 613

Product Code	Size	Approx. wt. kg / 100 pcs	Discharge Capacity at 1 bar pressure	Spraying Radius at 1 bar pressure	Standard Packing bag (pcs)
A10110304	4mm	0.50	1.3 *lpm*	2.2 m	100

G Sprinkler - Model 623

Product Code	Size	Approx. wt. kg / 100 pcs	Discharge Capacity at 1 bar pressure	Spraying Radius at 1 bar pressure	Standard Packing bag (pcs)
A10111304	4mm - pointed end	0.60	2.5 *lpm*	1.6 m	100
A10111307	10mm - square end	0.60	3.2 *lpm*	1.6 m	100

Holland Sprinkler - Model 555

Product Code	Size	Approx. wt. kg / 100 pcs	Discharge Capacity at 1 bar pressure	Spraying Radius at 1 bar pressure	Standard Packing bag (pcs)
A10112307	10mm	0.60	4.3 *lpm*	1.0 m	100

G Spray - Model 808

Product Code	Size	Approx. wt. kg / 100 pcs	Discharge Capacity at 1 bar pressure	Spraying Radius at 1 bar pressure	Standard Packing bag (pcs)
A11101304	4mm - pointed end	0.50	2.5 *l/pm*	1.3 m	100
A11101307	10mm - square end	0.60	2.8 *l/pm*	1.3 m	100

Spray Jet 180°

Product Code	Size	Approx. wt. kg / 100 pcs	Discharge Capacity at 1 bar pressure	Spraying Radius at 1 bar pressure	Standard Packing bag (pcs)
A11102304	3.2mm	0.04	1.2 *l/pm*	1.1 m	100

Spray Jet 360°

Product Code	Size	Approx. wt. kg / 100 pcs	Discharge Capacity at 1 bar pressure	Spraying Radius at 1 bar pressure	Standard Packing bag (pcs)
A11103304	3.2mm	0.04	1.4 *l/pm*	1.0 m	100

Roof Spray 180°

Product Code	Size BSP	Approx. wt. kg / 100 pcs	Discharge Capacity at 1 bar pressure	Spraying Radius at 1 bar pressure	Standard Packing bag (pcs)
A11104304	1/2"M	0.60	7 *l/pm*	2.0 m	100

Angular Dripper

Product Code	Size	Approx. wt. kg / 100 pcs	Discharge Capacity at 1 bar pressure	Standard Packing bag (pcs)
A12101304	3.2mm	0.14	5.4 *l/ph*	100

Stake Dripper 12

Product Code	Size	Approx. wt. kg / 100 pcs	Discharge Capacity at 1 bar pressure	Standard Packing bag (pcs)
A12103303	3.2mm	0.20	6.6 *lph*	1000

Quick Action Valve - Barb ends

Product Code	Size	Approx. wt. kg / 100 pcs	Standard Packing bag (pcs)
A13101310	16mm	2.10	100

Quick Action Valve - Barb / Threaded Ends

Product Code	Size	Approx. wt. kg / 100 pcs	Standard Packing bag (pcs)
A13101511	16mm x 1/2"	2.75	100
A13101512	16mm x 3/4"	0.92	100

Barb Male Connector

Product Code	Size BSP	Approx. wt. kg / 100 pcs	Standard Packing bag (pcs)
A13102511	1/2"M x 16mm	1.00	100
A13102512	3/4"M x 16mm	1.50	100
A13102514	3/4"M x 20mm	1.50	100

Barb Joiner

Product Code	Size	Approx. wt. kg / 100 pcs	Standard Packing bag (pcs)
A13103309	13mm	0.30	100
A13103310	16mm	0.60	100

Barb Joiner - Pointed End

Product Code	Size	Approx. wt. kg / 100 pcs	Standard Packing bag (pcs)
A13105304	4mm	0.06	100

Barb Joiner - Square End

Product Code	Size	Approx. wt. kg / 100 pcs	Standard Packing bag (pcs)
A13103303	3.2mm	0.05	100
A13104304	4mm	0.06	100

Barb Reducing Joiner

Product Code	Size	Approx. wt. kg / 100 pcs	Standard Packing bag (pcs)
A13106610	16mm x 13mm	0.05	100

Barb Tee

Product Code	Size	Approx. wt. kg / 100 pcs	Standard Packing bag (pcs)
A13107310	16mm	0.60	100

Barb Tee

Product Code	Size	Approx. wt. kg / 100 pcs	Standard Packing bag (pcs)
A13107303	3.2mm	0.10	100

Barb Elbow

Product Code	Size	Approx. wt. kg / 100 pcs	Standard Packing bag (pcs)
A13108310	16mm	0.60	100

Irrigation Fittings

End Plug

Product Code	Size	Approx. wt. kg / 100 pcs	Standard Packing bag (pcs)
A14101304	4mm	0.04	500

End Line

Product Code	Size	Approx. wt. kg / 100 pcs	Standard Packing bag (pcs)
A14102310	16mm	0.15	100

Rubber Grommet

Product Code	Size	Approx. wt. kg / 100 pcs	Standard Packing bag (pcs)
A15101310	16mm	0.30	200

Roof Clip

Product Code	Size	Approx. wt. kg / 100 pcs	Standard Packing bag (pcs)
A16101311	20mm	1.60	100

Hole Punch

Product Code	Size	Approx. wt. kg / 100 pcs	Standard Packing bag (pcs)
A17101304	4mm	0.10	100

Tubing

Product Code	Size	
A130304 30320	Micro Tube	3mm x 1mm x 200m
A130304 30390	Micro Tube	3mm x 1mm x 900m
A130305 31308	Micro Tubing	5mm x 3mm x 80m
A130306 31030	Lope Tubing	16mm x 13mm x 300m

Polyethylene pipes with a design stress of 6.3 MPa - PE 80 / MRS 80

Pipe series	S 10	S 8	S 6.3	S 5	S 4
SDR	21	17	13.6	11	9
PN	6	8	10	12.5	16

Outside Diameter mm	Minimum wall thickness mm				
20	-	-	-	-	2.3
25	-	-	-	2.3	2.8
32	-	-	-	3.0	3.6
40	-	-	-	3.7	4.5
50	-	-	-	4.6	5.6
63	-	-	4.7	5.8	7.1
75	-	4.5	5.6	6.8	8.4
90	4.3	5.4	6.7	8.2	10.1
110	5.3	6.6	8.1	10.0	12.3
125	6.0	7.4	9.2	11.4	14.0
140	6.7	8.3	10.3	12.7	15.7
160	7.7	9.5	11.8	14.6	17.9
180	8.6	10.7	13.3	16.4	20.1
200	9.6	11.9	14.7	18.2	22.4
225	10.8	13.4	16.6	20.5	25.2
250	11.9	14.8	18.4	22.7	27.9
280	13.4	16.6	20.6	25.4	31.3
315	15.0	18.7	23.2	28.6	35.2
355	16.9	21.1	26.1	32.2	39.7
400	19.1	23.7	29.4	36.3	44.7
450	21.5	26.7	33.1	40.9	50.3
500	23.9	29.7	36.8	45.4	55.8
560	26.7	33.2	41.2	50.8	-
630	30.0	37.4	46.3	57.2	-

SDR - Standard dimension ratio
PN - Nominal pressure maximum allowable operating pressure of the pipe at 20°C
Table abstract from ISO 4427 & MS 1058

Polyethylene pipes with a design stress of 8 MPa - PE 100 / MRS 100

Pipe series	S 8	S 6.3	S 5
SDR	17	13.6	11
PN	10	12.5	16

Outside Diameter mm	Minimum wall thickness mm		
32	-	-	3.0
40	-	-	3.7
50	-	-	4.6
63	-	4.7	5.8
75	4.5	5.6	6.8
90	5.4	6.7	8.2
110	6.6	8.1	10.0
125	7.4	9.2	11.4
140	8.3	10.3	12.7
160	9.5	11.8	14.6
180	10.7	13.3	16.4
200	11.9	14.7	18.2
225	13.4	16.6	20.5
250	14.8	18.4	22.7
280	16.6	20.6	25.4
315	18.7	23.2	28.6
355	21.1	26.1	32.2
400	23.7	29.4	36.3
450	26.7	33.1	40.9
500	29.7	36.8	45.4
560	33.2	41.2	50.8
630	37.4	46.2	57.2

SDR - Standard diameter ratio
PN - Nominal pressure maximum allowable operating pressure of the pipe at 20°C
Table abstract from ISO 4427 & MS 1058

'Fish' brand products are manufactured with reference to the following standards.

AS 1646 : 2000	-	Elastomeric seals for waterworks purposes
AS 4129	-	Fitting for PE Pipes for pressure applications.
ASTM D2683 : 1992	-	Standard specification for socket-type polyethylene fittings for outside diameter - controlled polyethylene pipe and tubing
BS 21 : 1985	-	Pipe thread for tubes and fittings where pressure - tight joints are made on threads (metric dimension)
BS 4504 : 1989	-	Circular flanges for pipes, valves and fittings (PN designated)
BS 5114 : 1975	-	Performance requirements for joints and compression fittings for used with polyethylene pipes
BS 3505	-	uPVC pipe
BS 6920	-	Effect on the quality of the water
DIN 16963 : 1980	-	High density polyethylene (HDPE) fitting - Part 1, 2, 4, 5, 6, 8, 9 & 10
DIN 8074 : 1999	-	Pipes of high density polyethylene (HDPE) - dimension
DIN 8075 : 1999	-	Pipes of high density polyethylene (HDPE) - testing
ISO 14236 : 2000	-	Plastics pipes and fittings-Mechanical joint compression fittings for use with polyethylene pressure pipes in water supply systems
ISO 228 : 2000	-	Pipe threads where pressure-tight joints are not made on the threads
ISO 4427 : 1996	-	PE pipes for water supply
JKR 20200-0046-99	-	JKR standard specification for polyamide / polypropylene alloy (PA / PP) clamp saddles to be used with uPVC, ductile iron, CIOD and AC pipe
JKR 20200-0055-99	-	JKR standard specification for polypropylene (PP) Tapping Ferrules to be used with PE and uPVC pipe
JKR no. 1.95 (BA)	-	PP clamp saddle to be used with PE pipes
MS 1058 : 2002	-	Specification for polyethylene (PE) pipes for water supply
Pr EN 12201	-	Plastic piping systems for water supply - Polyethylene (PE)

Abbreviations

ABS	-	Acrylonitrile Butadiene Styrene
AC	-	Asbestos Cement
Approx.wt.	-	Approximate weight
AS	-	Australian Standard
ASTM	-	America Society for Testing of Materials
BS	-	British Standard
BSP	-	British Standard Pipe Thread
CIOD	-	Cast Iron
Dia.	-	Diameter
DIN	-	Deutsche Normen
F	-	Female thread
HDPE	-	High Density Polyethylene
IKRAM	-	Institute of Public Works Department Malaysia
ISO	-	International Organisation for Standardization
JKR	-	Jabatan Kerja Raya Malaysia (Public Works Department Malaysia)
kg	-	kilogramme
LDPE	-	Low Density Polyethylene
lph	-	litre per hour
lpm	-	litre per minute
M	-	Male thread
m	-	meter
mm	-	millimeter
Mpa	-	Megapascal
MRS	-	Minimum Required Strength
MS	-	Malaysian Standard
NBR	-	Nitrile Butadiane Rubber
ND	-	Nominal Diameter
No(s).	-	Number(s)
O.D.	-	Outside Diameter
^{0}C	-	Degree Celcius
PA	-	Polyamide
PA / PP	-	Polyamide / Polypropylene Alloy
pc(s)	-	piece(s)
PE	-	Polyethylene
PN	-	Nominal Pressure
PP	-	Polypropylene
SDR	-	Standard Dimension Ratio
ss	-	Stainless Steel
uPVC	-	Unplasticised Poly Vinyl Chloride
WC	-	Water Closet

GENERAL

These conditions of sales apply to items and services by Chien Jin Plastic Sdn. Bhd.

GUARANTEE

Our goods are guaranteed for damages due to defect of design, material or even workmanship. The guarantee expires:

a) One year after delivery of goods.
b) When product are not used according to specialized indicated working conditions.
c) When goods have been modified or manipulated.

Our guarantee is limited to the replacement of defective products or to their repair in our factory, excluding completely any other responsibility, especially any indemnity or liability for damages caused by the use of our products.

GOODS RECEIPT

The buyers are to check carefully for type and quantity after receiving. Any discrepancy, please advise immediately to Chien Jin Plastic Sdn. Bhd. within 1 month after receiving our goods.

OWNERSHIP RIGHT

Products supplied is remains the property of Chien Jin Plastic Sdn. Bhd. until the payment is completed.

These general terms and conditions are property of Chien Jin Plastic Sdn. Bhd.

Norma Products Malaysia Sdn. Bhd. (235586-U)

4&6 Prsn. Perusahaan Kledang (U) 1/3, Taman Perindustrian Chandan Raya,
31450 Menglembu, Ipoh, Perak, Malaysia.
Phone: +605- 282 2288 Fax: +605- 282 4588
info.my@normagroup.com www.normagroup.com/fish

ISO 9001:2008
ISO 14001:2004
OHSAS 18001:2007
Certified Management System

SIRIM
CERTIFIED TO MS 795:2002

Malaysia
Good design
Compression Fittings
2008

Made in Malaysia

Chien Jin Plastic
Sdn. Bhd.